Lerra PURE

Construction guide

Lerra PURE (Barrel 2.2x2.2)

Compatible with both Front Glass Wall and Front Wooden Wall construction options, including Half panoramic and Panoramic construction.

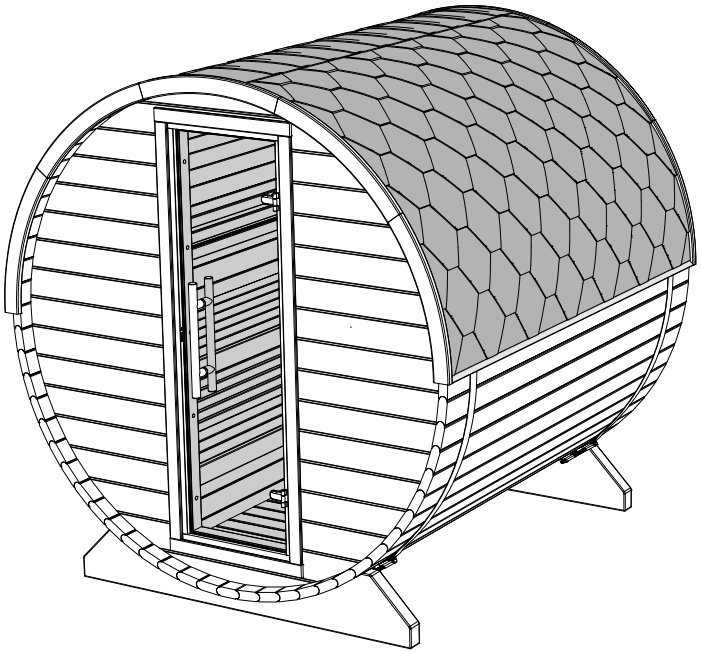

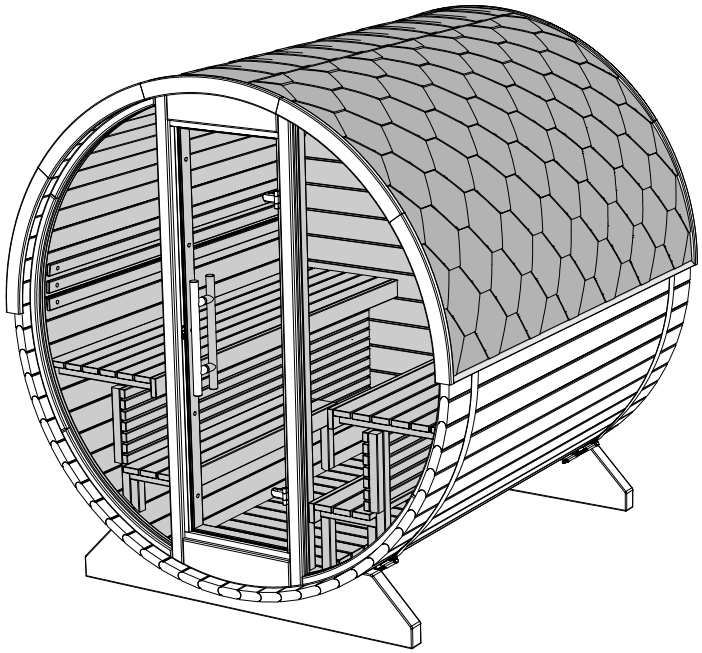

Read the manual and check the parts for completeness before assembly!

Images are illustrative and may differ from reality, the construction principle is the same!!!

USER MANUAL OF THE SAUNA

1. It is recommended to install the sauna above ground level to prevent the legs of the sauna from coming into direct contact with the ground. Install a water-resistant material, such as bitumen strips, between the legs of the sauna and the base.
2. Make sure that the surface on which you install the sauna is levelled and stable both before and after installing the sauna. Otherwise, the doors of the sauna may not open and close properly.
3. If the top part of the chimney has not been installed upon delivery of the sauna, it should be placed into the chimney pipe from the roof of the sauna.
4. During the first heating of the sauna, it must be constantly supervised and the doors should be kept open, as the stove emits a specific smell when first heated. Read more from the user manual of the sauna stove.
5. The maximum permitted temperature of the steam room is **+90 °C**. If heated to a higher temperature, the sauna may be overheated.
6. After each use of the sauna, it is recommended to keep the stove warm, the doors open, and the footrests up for a while to allow the sauna to dry from the inside. If necessary, the water on the floor should be directed to the drain with a floor scraper to avoid damage caused by excess humidity.
7. **When the weather is humid and if the wood has expanded, the metal hoops around the sauna should be loosened to avoid breaking the clamps and jamming the doors.** The hoops can be adjusted from the nut of clamp M12 located on the side of the sauna. To alleviate excess tension on the clamp and the hoop itself, loosen nut M12 (wrench no. 19) until the hoop can be shifted left and right. Then, re-tighten the nut until the hoop is under slight pressure and pressed fully against the wood so that it cannot be pulled away from the walls of the sauna. **When the weather is less humid and the wood has dried, the metal hoops around the sauna should be tightened from nut M12.** Tighten the nut so the hoop is under slight pressure. The hoop must be pressed fully against the wood so that it cannot be pulled away from the walls of the sauna. Saunasell OÜ is not liable for damage caused to the sauna due to a broken hoop clamp.
8. If the door is shifted out of place when the hoops are tightened, lift the exterior door off the hinges and regulate the hinges. If this is not a sufficient solution, remove the trims of the door and unscrew the screws of the doorframe beneath them. This will relieve the pressure on the door. If necessary, the opening of the door may be made wider, after which the screws should be re-tightened and the trims and door reinstalled.
9. The interior door should be regulated from the stopper and, if necessary, the hinges. If this is not a sufficient solution, remove the trims of the door and unscrew the screws of the doorframe beneath them. This will relieve the pressure on the door.
10. Locking the sauna door from the inside is prohibited.
11. In order to avoid damage caused by the weight of snow, any snow should be removed from the roof of the sauna. Keep in mind that the roof covering should not be damaged during snow removal.
12. If your sauna has lighting, install a 3G 2,5 mm^2 outdoor power cable and connect it in juniper box provided with the sauna (L1 – brown , N – blue , GR – green-yellow). The power cable of the sauna must be connected to a residual-current circuit breaker! Consult an electrician if necessary.

Maintenance of the sauna

1. **The interior surfaces of the sauna, the window frames of the steam and washing room, and the frames of interior doors must be treated with a special substance before initial use to protect them from humidity and dirt and extend the useful life of the sauna.** Later, this should be done once or twice a year. TEKNOS Satu Saunasuoja or Tikkurila Supi Saunasuoja may be used for this.
2. **Before initial use of the sauna, the benches and footrests must be treated with a protective oil to extend their useful life.** Later, this should be done once or twice a year. TEKNOS Satu Laudesuoja or Tikkurila Supi Laudesuoja may be used for this.
3. **Before initial use of the sauna and once a year after that, the door, doorframe, threshold, and window frame of the anteroom as well as the floors of the washing room and anteroom should be treated with the lacquer Teknos Helo Aqua 40.**
4. **The exterior surfaces of the sauna are given the first protective coating during production(DIY saunas are not treated). The second coating should be applied approximately two months after purchasing the sauna to extend its useful life and maintain its appearance.** Use Remmers Aidol HK-Lasur for this.
5. Saunasell OÜ is not liable for damage caused to the sauna due to insufficient maintenance or no maintenance at all.

WARRANTY

- The products have a 24-month warranty covering material and production defects, taking effect from the delivery of the sauna to the client.
- The warranty is valid if the user has reviewed the user manuals and abides by them.
- The warranty is void if the sauna has not been assembled by Saunasell OÜ.
- Please note! The warranty period differs for products on trailers and products intended for commercial use.
- The warranty does not cover defects characteristic of wood, such as discoloration, changes, issues, or cracks caused by alternating or excess humidity, etc.
- The warranty does not cover normal wear and tear of the product caused by its use and damage caused by incorrect installation or use is not compensated.
- The warranty does not cover damage caused by thunder or other weather phenomena.
- The warranty does not cover damage caused by incorrect installation by the client.
- The warranty expires when attempts are made to independently change or fix the product or if it is not used for its intended purpose.
- The warranty is void if the product is stored in an incorrect position or in the wrong conditions.
- The warranty is valid if the buyer informs the seller of the defect within a reasonable time (7 days).

CONTENTS

- Exterior construction (Drawing):
  - Lerra PURE (Barrel 2.2x2.2) views
  - Lerra PURE (Barrel 2.2x2.2) wall options
- Bench assembly (Drawing):
  - Lerra PURE (Barrel 2.2x2.2) sectional views from inside
- Exterior construction (Detail list):
  - Detail list 1
  - Detail list 2
  - Detail list 3 (Optional)
- Bench assembly:
  - Detail list 1
  - Detail list 2
- Tools and materials:
- Exterior construction:
  - Floor construction and preparation . . . . . 1.1 - 1.5
  - Preparation of the walls . . . . . 2.1 - 2.5
  - Construction of walls . . . . . 3.1 - 3.8
  - Roof preparation and construction . . . . . 4.1 - 4.6
  - Installation of doors and vent covers . . . . . 5.1 - 5.3
- Bench assembly
  - Wooden wall with and without Half Panoramic wall . . . . . 1.1 - 1.6
  - Front glass wall with and without Half Panoramic wall . . . . . 2.1 - 2.6
  - Wooden wall with Full Panoramic wall . . . . . 3.1 - 3.6
  - Bench backrests, floor grate and thermal plate . . . . . 4.1 - 4.2

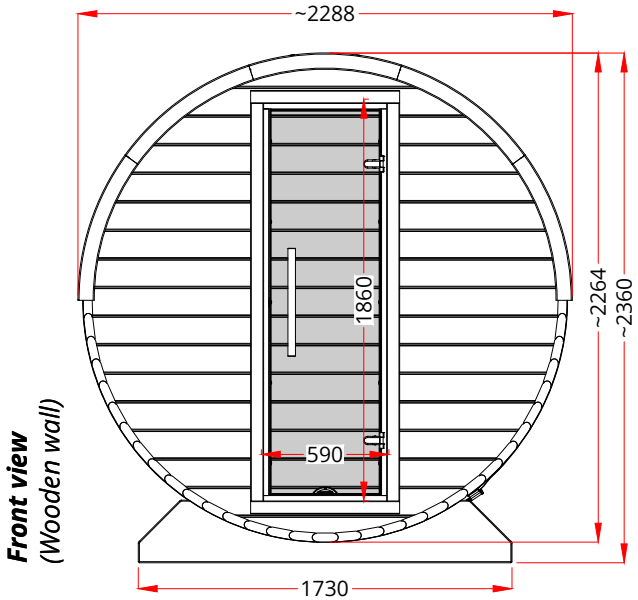

Front view
(Wooden wall)

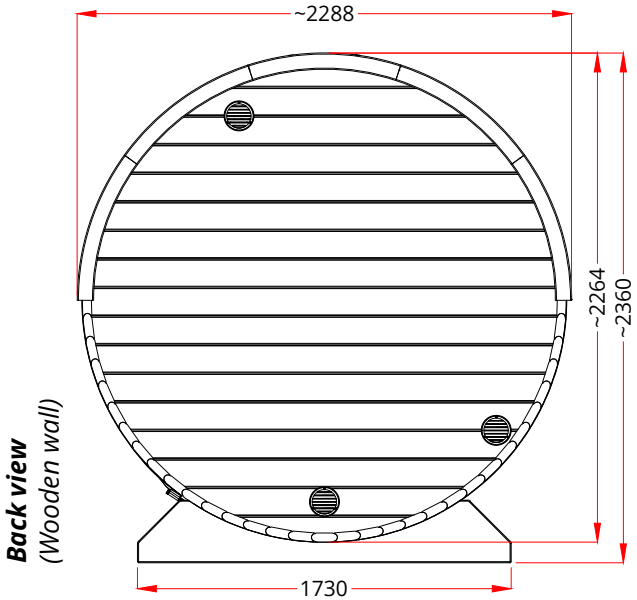

Back view
(Wooden wall)

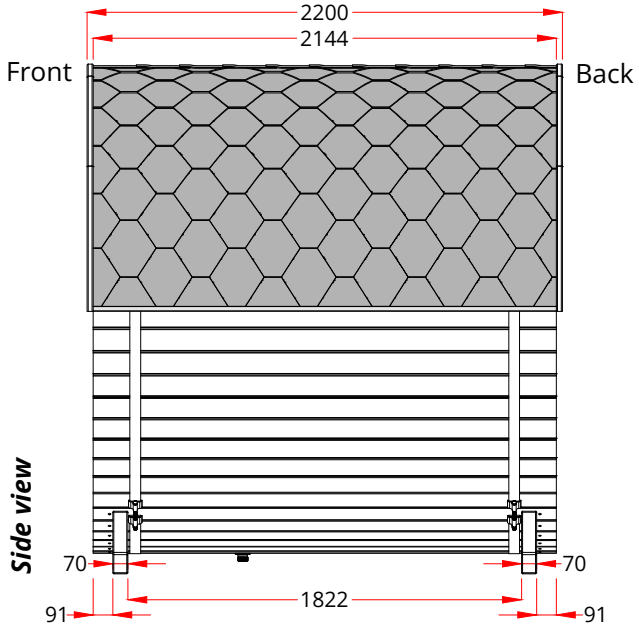

Side view

Lerra PURE (Barrel 2.2x2.2)

views

Back wall options

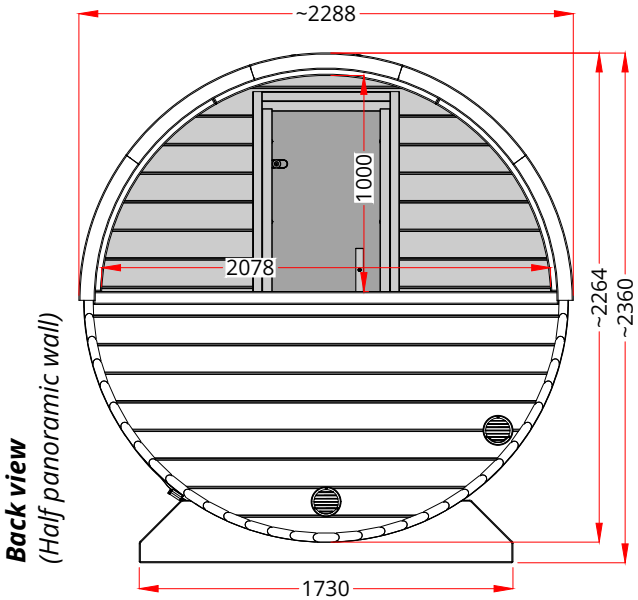

Back view
(Half panoramic wall)

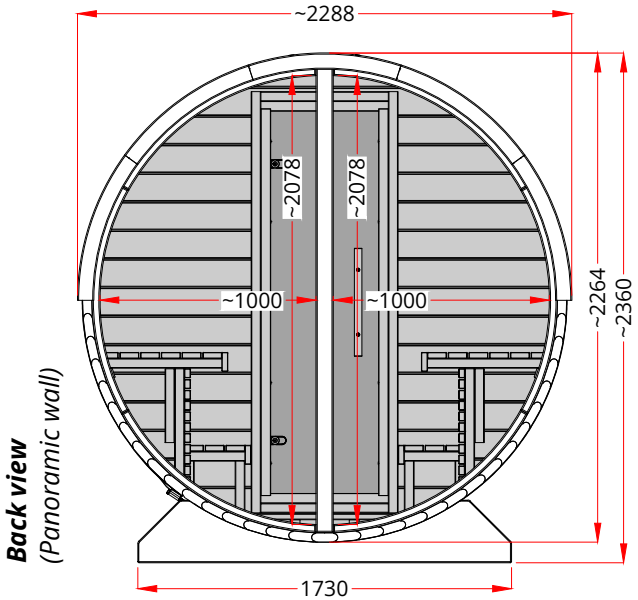

Back view
(Panoramic wall)

Front wall options

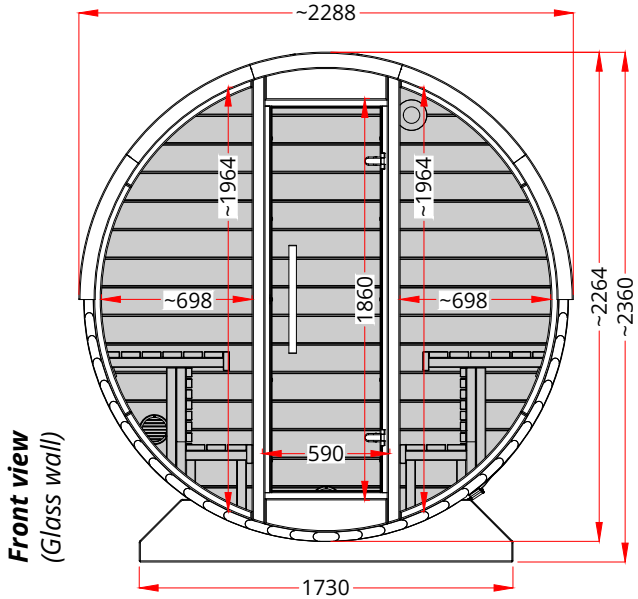

Front view
(Glass wall)

Lerra PURE (Barrel 2.2x2.2)

wall opitions

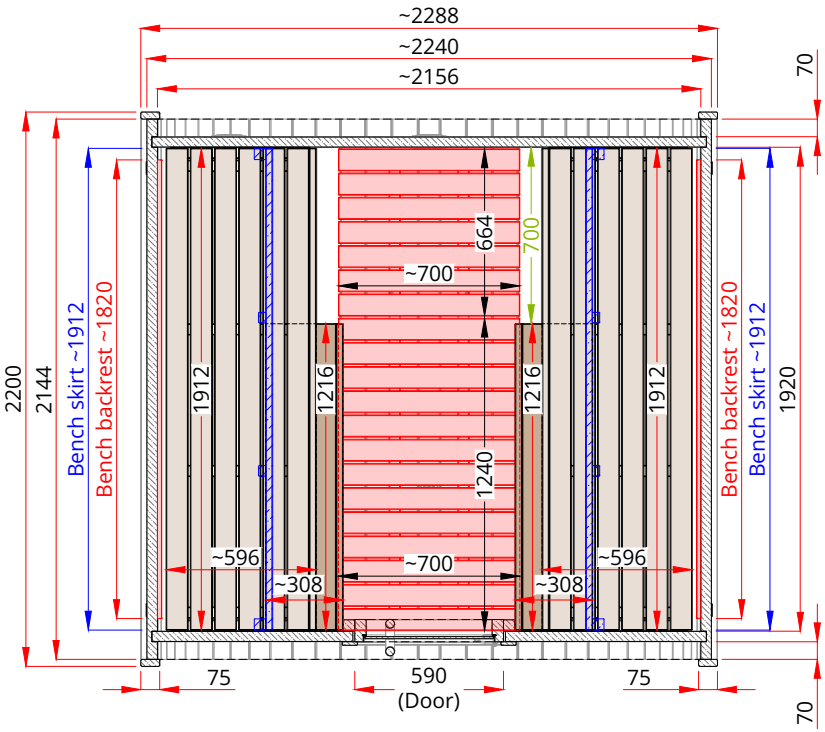

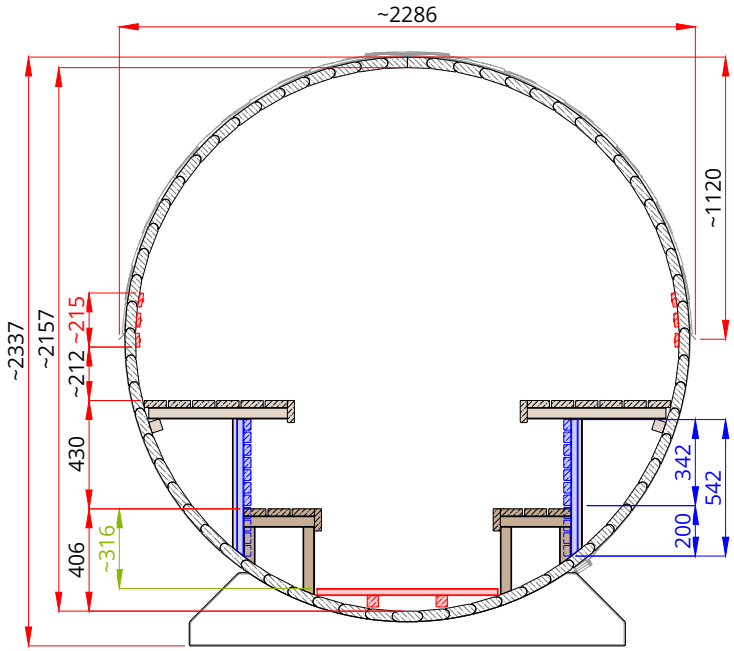

Lerra PURE (Barrel 2.2x2.2)

Sectional views from inside

Tools needed for sauna construction:

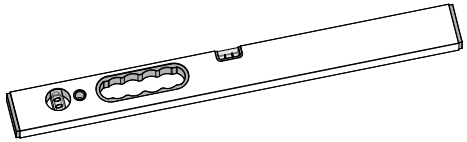

- Spirit level /
  Laser level (best option)

- Tape measure /
  folding rule

- Marking tool - pencil
  (do not use a marker pen)

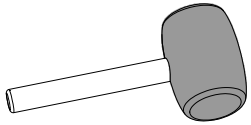

- Rubber hammer

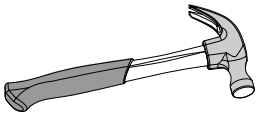

- Hammer

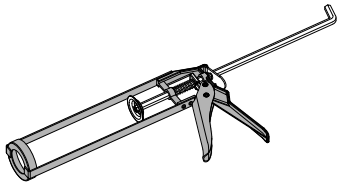

- Sealant gun

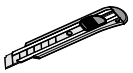

- Utility knife

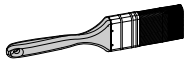

- Paintbrush

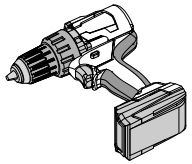

- Cordless drill(s)

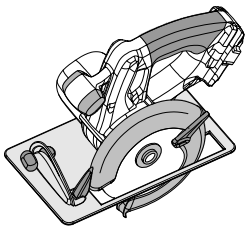

- Circular saw

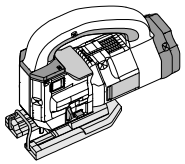

- Jigsaw / hand saw

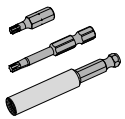

- Screwdriver bits

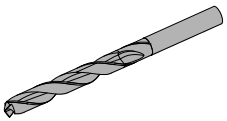

- drill bits (Ø3mm;
  Ø4mm and Ø10-12mm)

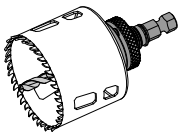

- hole saw (Ø68mm and Ø44mm)
  for cutting a hole for the drain pipe (only necessary if there is no hole in the s center board)!

Additional materials required are not included:

- Wood glue /
  assembly adhesive

- Varnish
  (to protect wood from moisture and mold)

- Paint or wood oil
  for wood protection (external surfaces of sauna)

Tools and materials

** Depends on the wall options selected.*

Lerra PURE (Barrel 2.2x2.2)	
Length a	~1962 mm
Length b	~2140 mm
Length c	~2144 mm
Length d	~580 mm

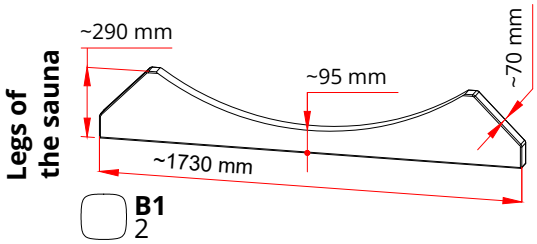

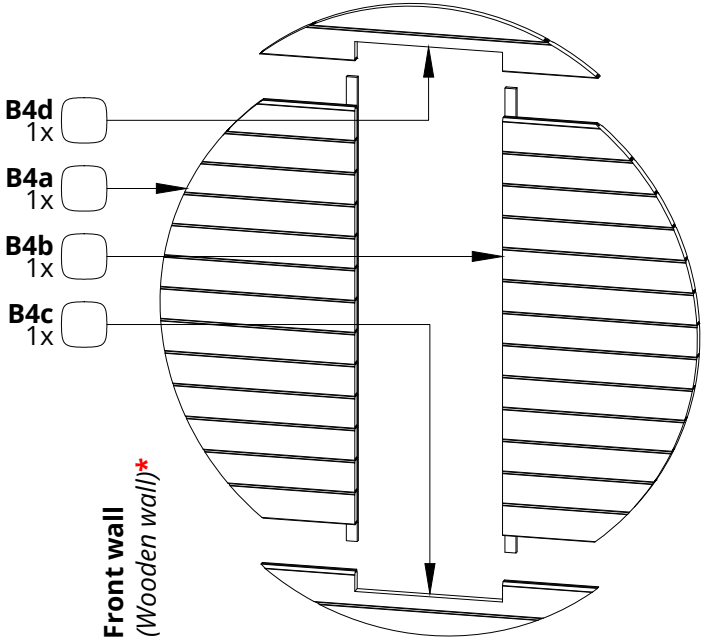

Detail profiles

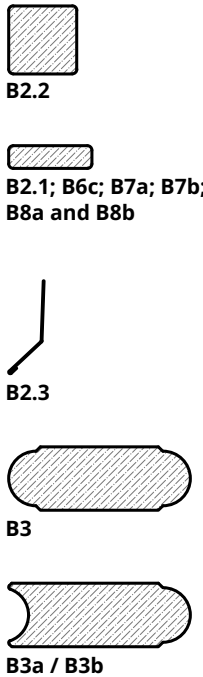

B3a and B3b are the same. For construction, divide into equal quantities

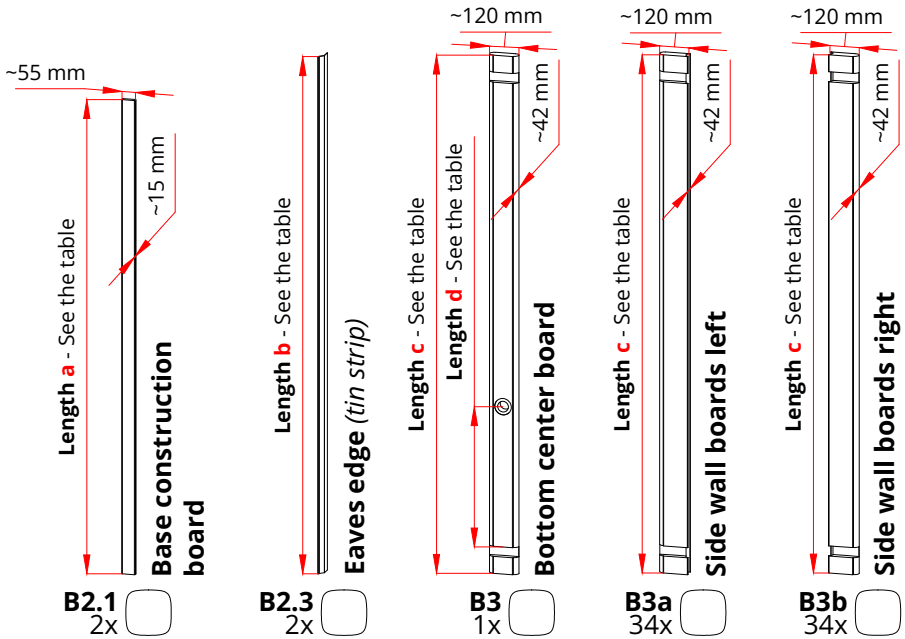

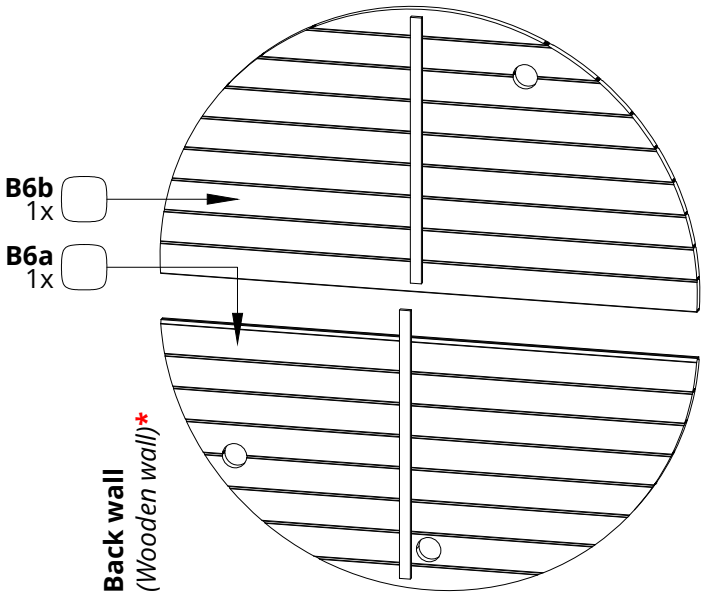

Detail list 1

** Depends on the wall options selected.*

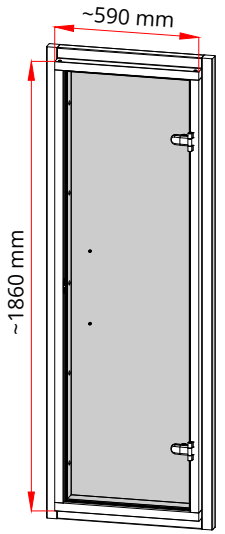

Glass front door

B7 1x

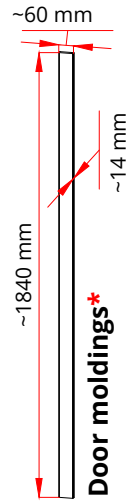

Door moldings*

B7a 2x

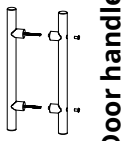

Door handle

B7c 1 set

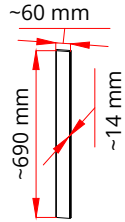

Door moldings*

B7b 2x

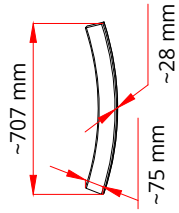

Side wall end coverings

D1 10x

Varnish *(INARIJÄRVI)*

C1 1x

Paint (Pine) *(Remmer HK Lasur)*

C3 1x

Bitumen silicone

C5 1x

Steel strap

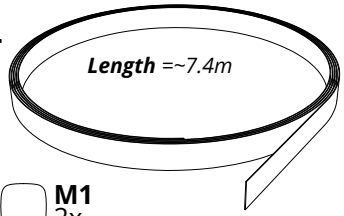

M1 2x

Steel bolt

M2 2x

Steel washer

M3 4x

Steel hex nut

M4 2x

Steel straps tension clamp

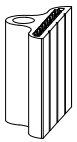

M5 4x

Rubber seal

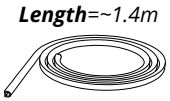

R1 2x

Ridge and eave bitumen sheet

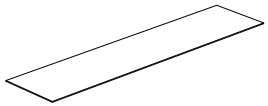

R4 9 pcs.

Bitumen pattern sheets

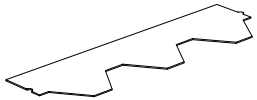

R5 3 pkg.

Piece of drain pipe

V1 1x

Ventilation grill cover

V2 5x (Standard) 4x (Half panorama)

Openable venti-lation hood

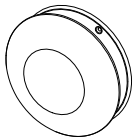

V3 1x

Fasteners for the main construction of the sauna:

Name in manual	Nails and screws / Screw size	Quantity
S7	Screws 4,5x80 for Spruce	50
	Screws 4,2x75 for Thermo	
S6.1	Screws 4,5x70	25
S5	Screws 4,5x60 for Spruce	135
	Screws 4,2x55 for Thermo	
S2	Screws 3x40	15
S1	Screws 3x30	35
R6	Nail 2,5x20	1kg

Fasteners for sauna door(s):

Name in manual	Nails and screws / Screw size	Quantity
S6.2	Screws 4,2x75	20
S3.2	Screws 4,5x50	20
S2	Screws 3x40	20
P	Hole plug	15

Detail list 2

Exterior construction

***** Door molding **B7a** will be removed during construction.***

(OPTIONAL) Fasteners for Front glass wall

Name in manual	Nails and screws / Screw size	Quantity
S5	Screws 4,5x60 for Spruce	12
	Screws 4,2x55 for Thermo	

(OPTIONAL) Fasteners for Half Panoramic back wall

Name in manual	Nails and screws / Screw size	Quantity
S7	Screws 4,5x80 for Spruce	5
	Screws 4,2x75 for Thermo	
S5	Screws 4,5x60 for Spruce	5
	Screws 4,2x55 for Thermo	
S2	Screws 3x40	5

(OPTIONAL) Fasteners for Panoramic back wall

Name in manual	Nails and screws / Screw size	Quantity
S3.2	Screws 4,5x50	5
S2	Screws 3x40	10

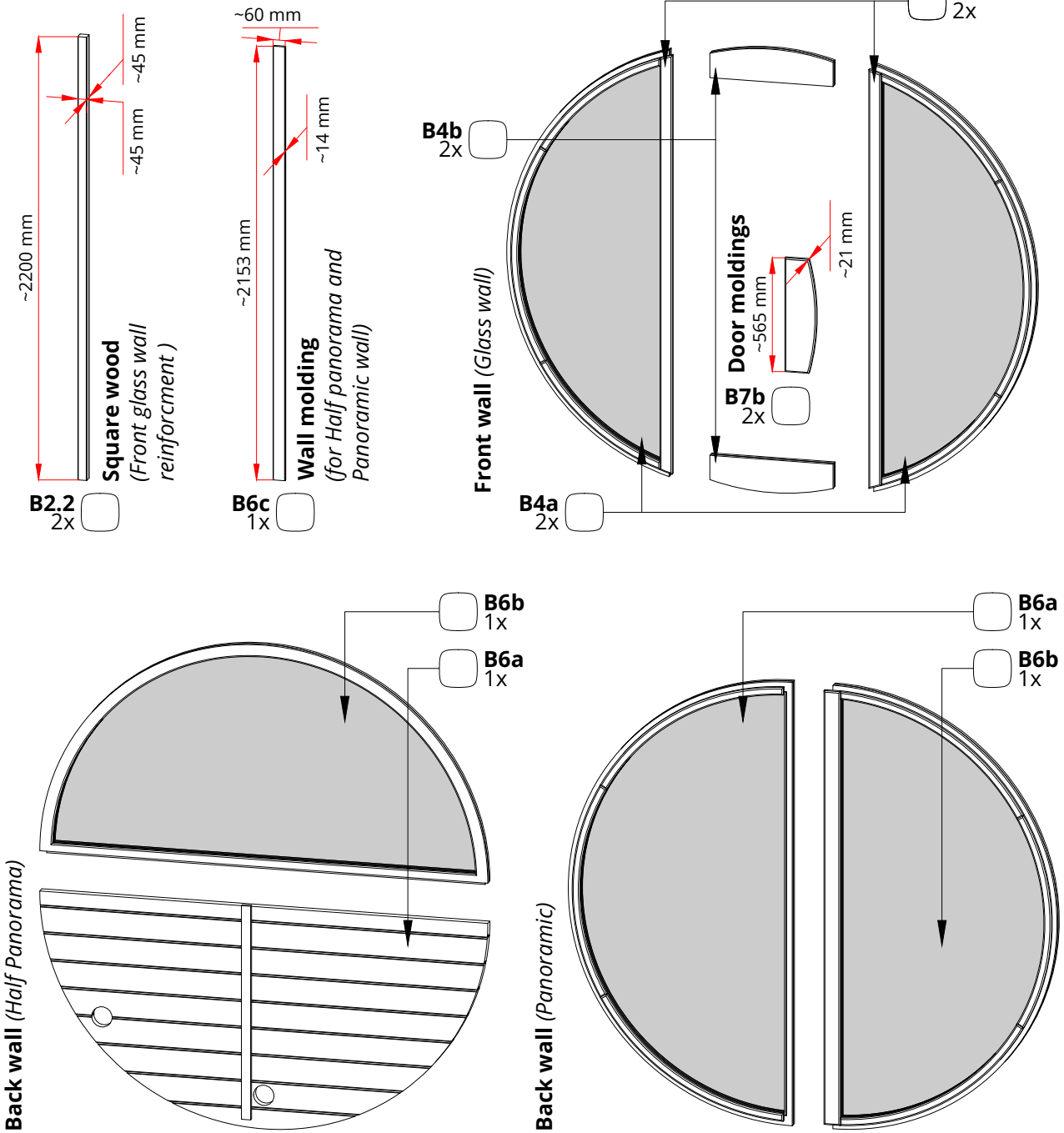

Detail list 3 (Optional)

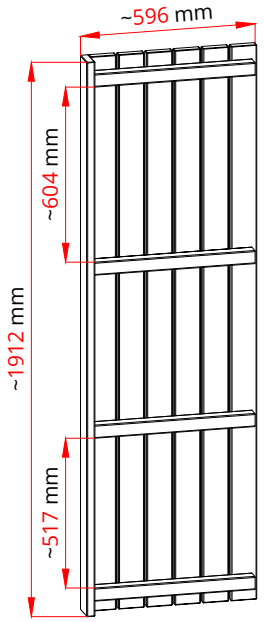

Upper bench *(left side)*

I1
1x

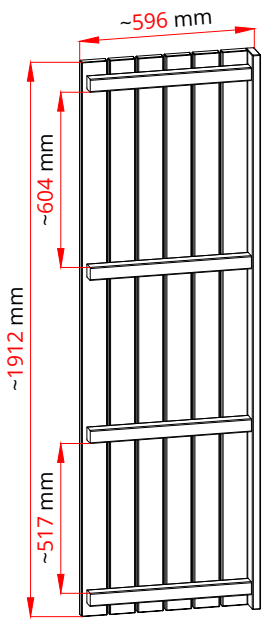

Upper bench *(right side)*

I1b
1x

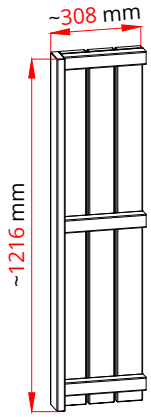

Lower bench *(left side)*

I2a
1x

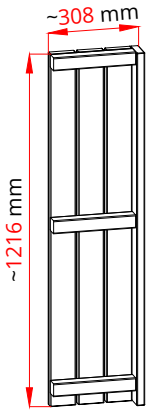

Lower bench *(right side)*

I2b
1x

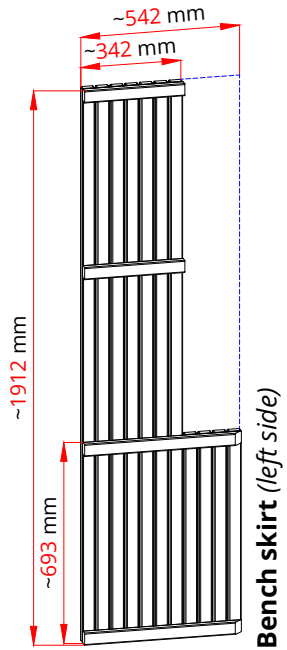

Bench skirt *(left side)*

I3a
1x

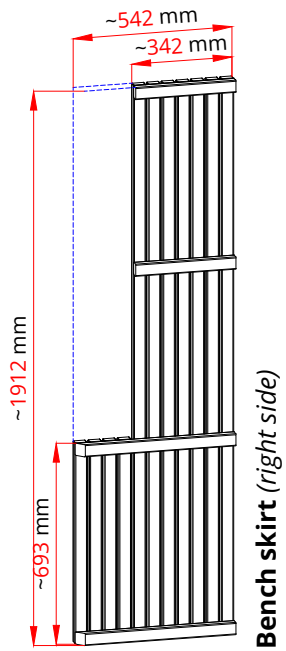

Bench skirt *(right side)*

I3b
1x

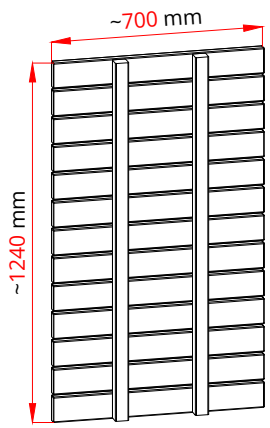

Floor grate

I4
1x

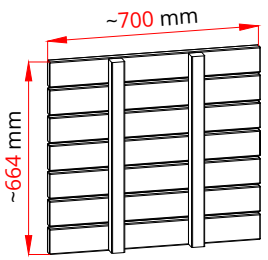

Floor grate

I5
1x

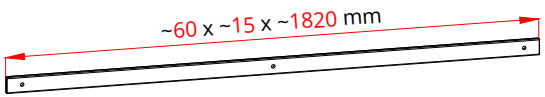

I6
6x

Bench backrest boards

Detail list 1

Bench assembly

Steam room :

Name in manual	K Square woods 45x45mm	Qty.		
		*A	*B	*C
K60	600 mm	2	4	4
K55	550 mm	4	2	2
K46	460 mm	2	-	2
K45	450 mm	-	2	2
K34	340 mm	2	2	-
K28	280 mm	4	4	4
K20	200 mm	4	4	6
K10	100 mm	4	4	4

***A** - Wooden wall(s) and Front wooden walll with and without Half Panoramic wall.
***B** - Front wooden wall and Panoramic wall.
***C** - Front Glass wall with and without Half Panoramic wall.

Steam room :

Name in manual	Screws (Scale 1:2)/ Screw size	Qty.
S7	Screws 4,5x80 for Spruce	60
	Screws 4,2x75 for Thermo	
S5	Screws 4,5x60 for Spruce	50
	Screws 4,2x55 for Thermo	
S2	Screws 3x40	20
P	Hole plug	20

Detail list 2

Bench assembly

S7	Screws 4,5x80 for Spruce Screws 4,2x75 for Thermo	4

NB! use a level

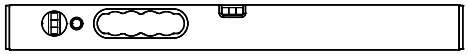

The base of the sauna must be level!

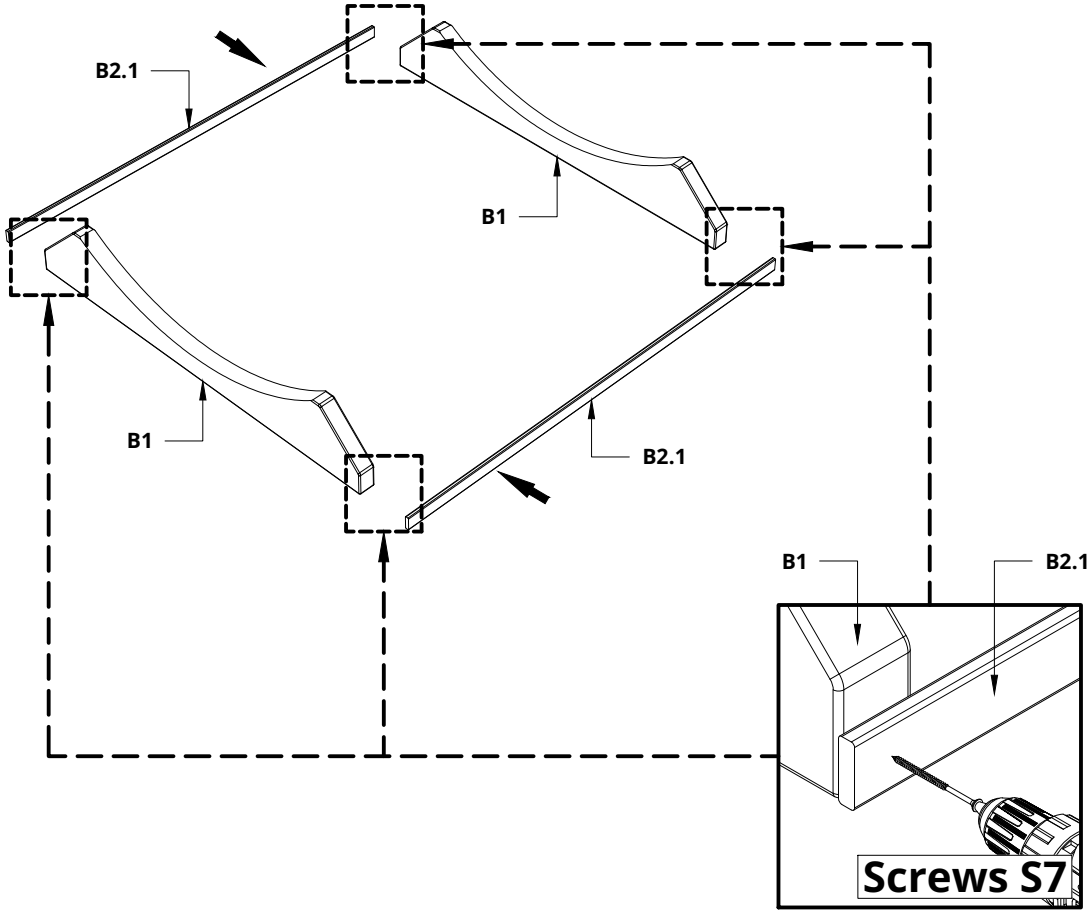

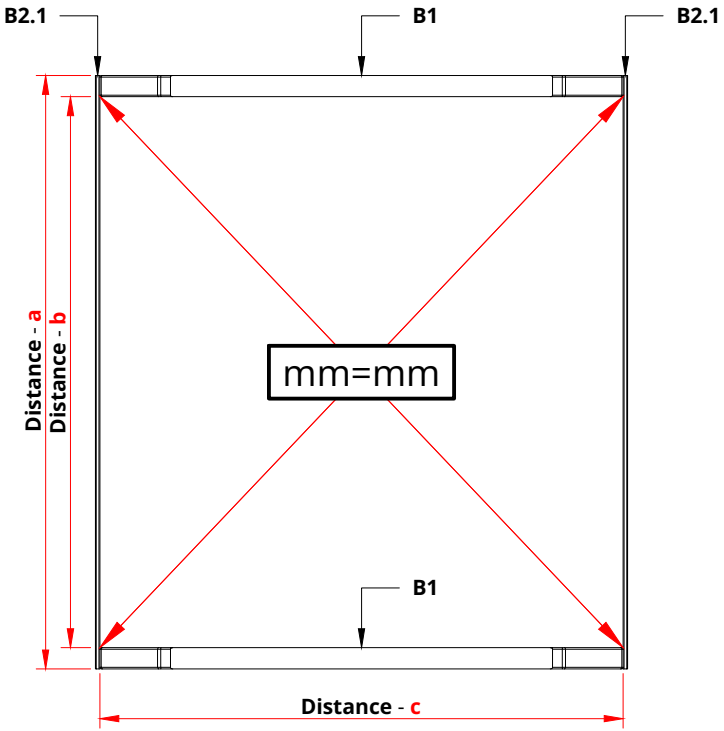

Lerra PURE (Barrel 2.2x2.2)	
Distance - a	~1962 mm
Distance - b	~1822 mm
Distance - c	~1730 mm

S7	Screws 4,5x80 for Spruce Screws 4,2x75 for Thermo	4

Please countersink the screw head(s)!

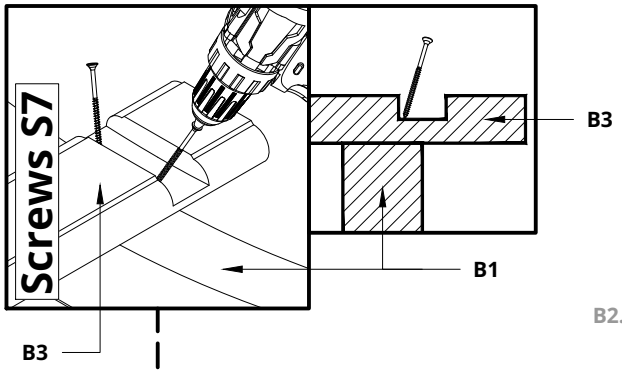

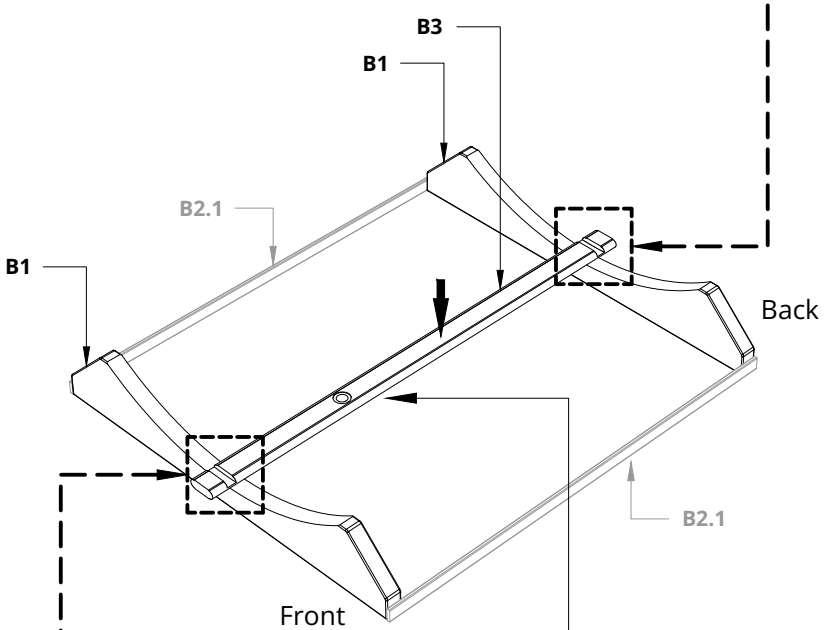

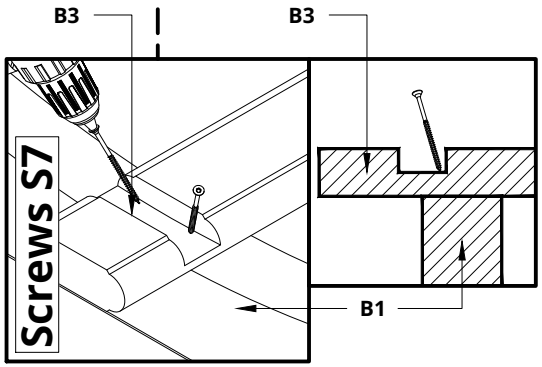

Pay attention!
Install the middle board in the correct orientation if it has a water drain hole.

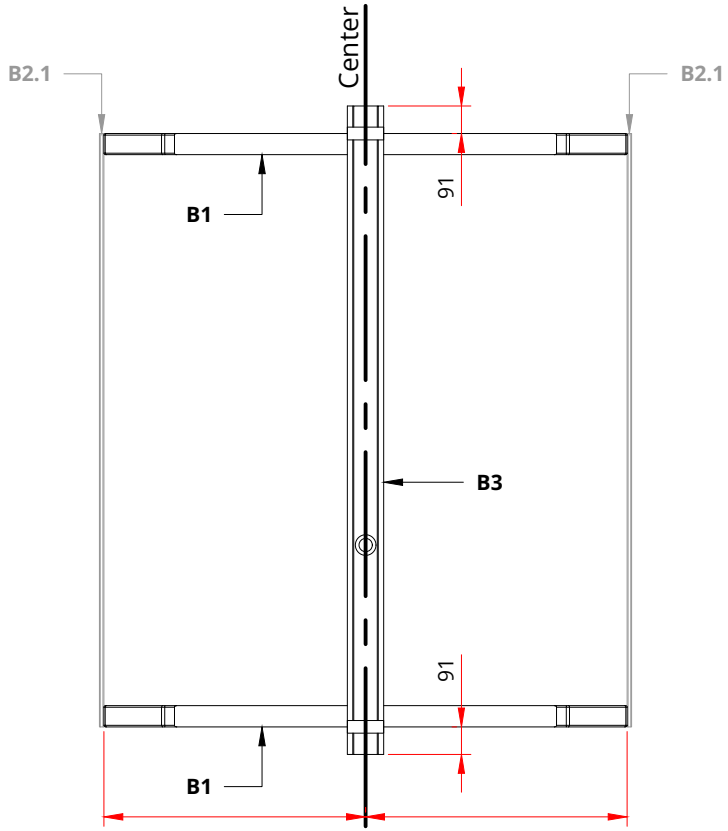

mm=mm

S7	Screws 4,5x80 for Spruce Screws 4,2x75 for Thermo	24

Please countersink the screw head(s)!
Use a rubber mallet to tap the board(s) together and fasten them with screws!
Drill 10 - 12 mm hole in each board groove!

Cut a hole for the drain pipe *(only necessary if there is no hole)*!

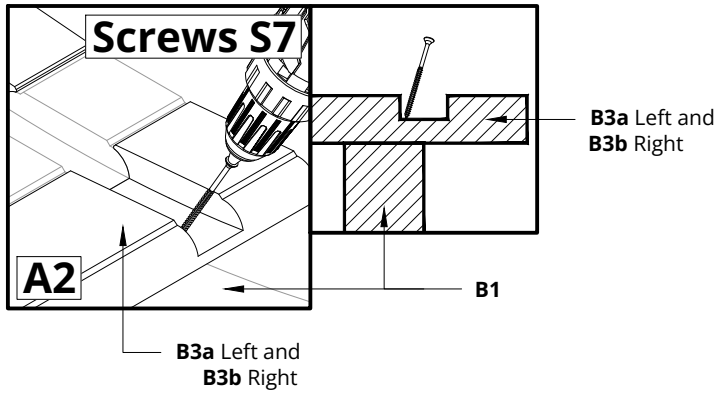

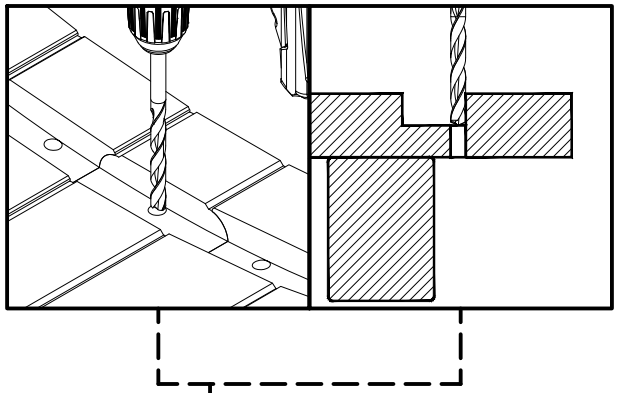

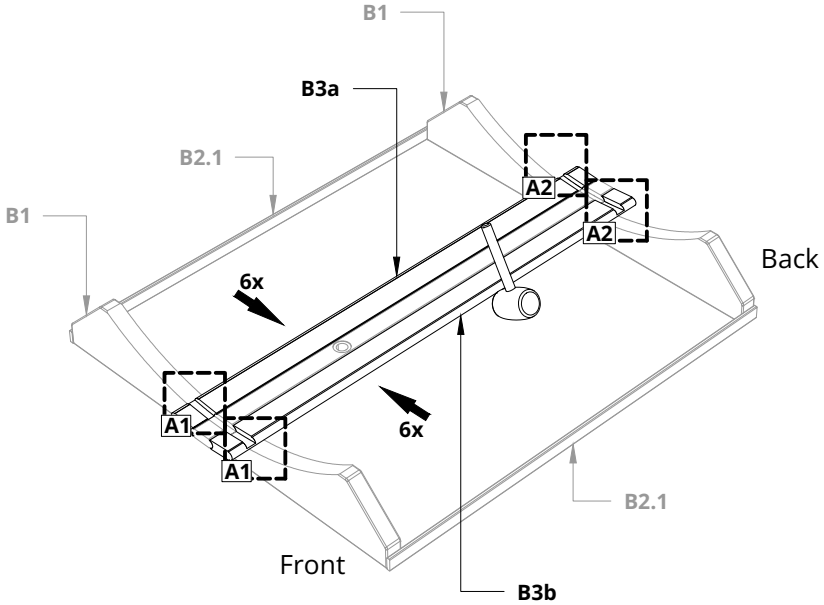

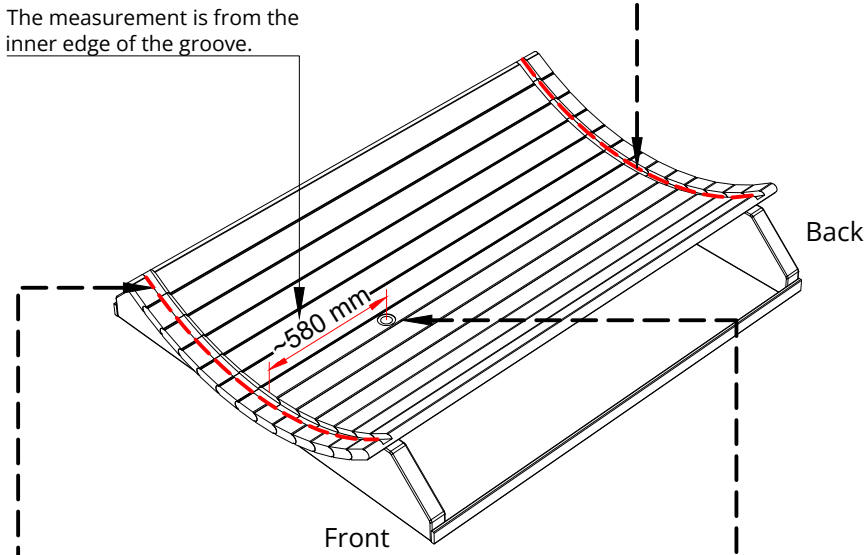

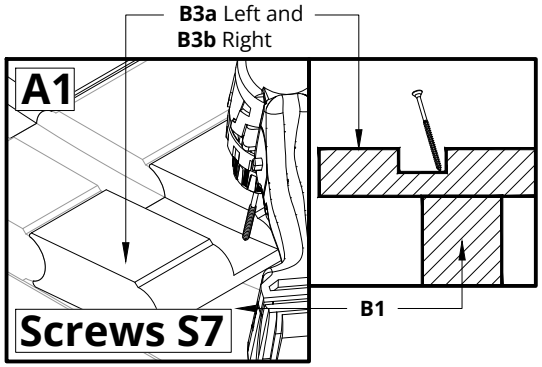

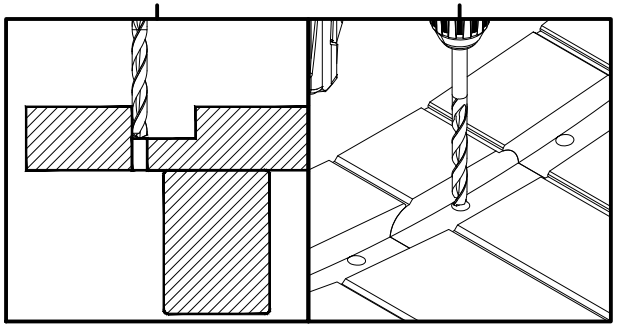

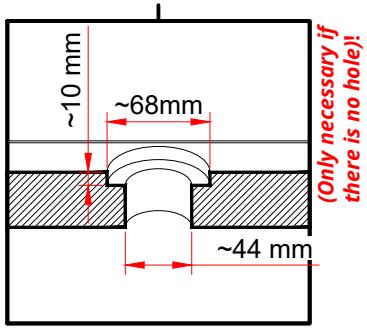

Clean the groove and floor surfaces from wood waste and other dirt!
Cover the grooves and the floor surfaces (middle) with varnish!*
Paint the front end and back end of the board(s)!*
** Follow the manufacturer's instructions!*

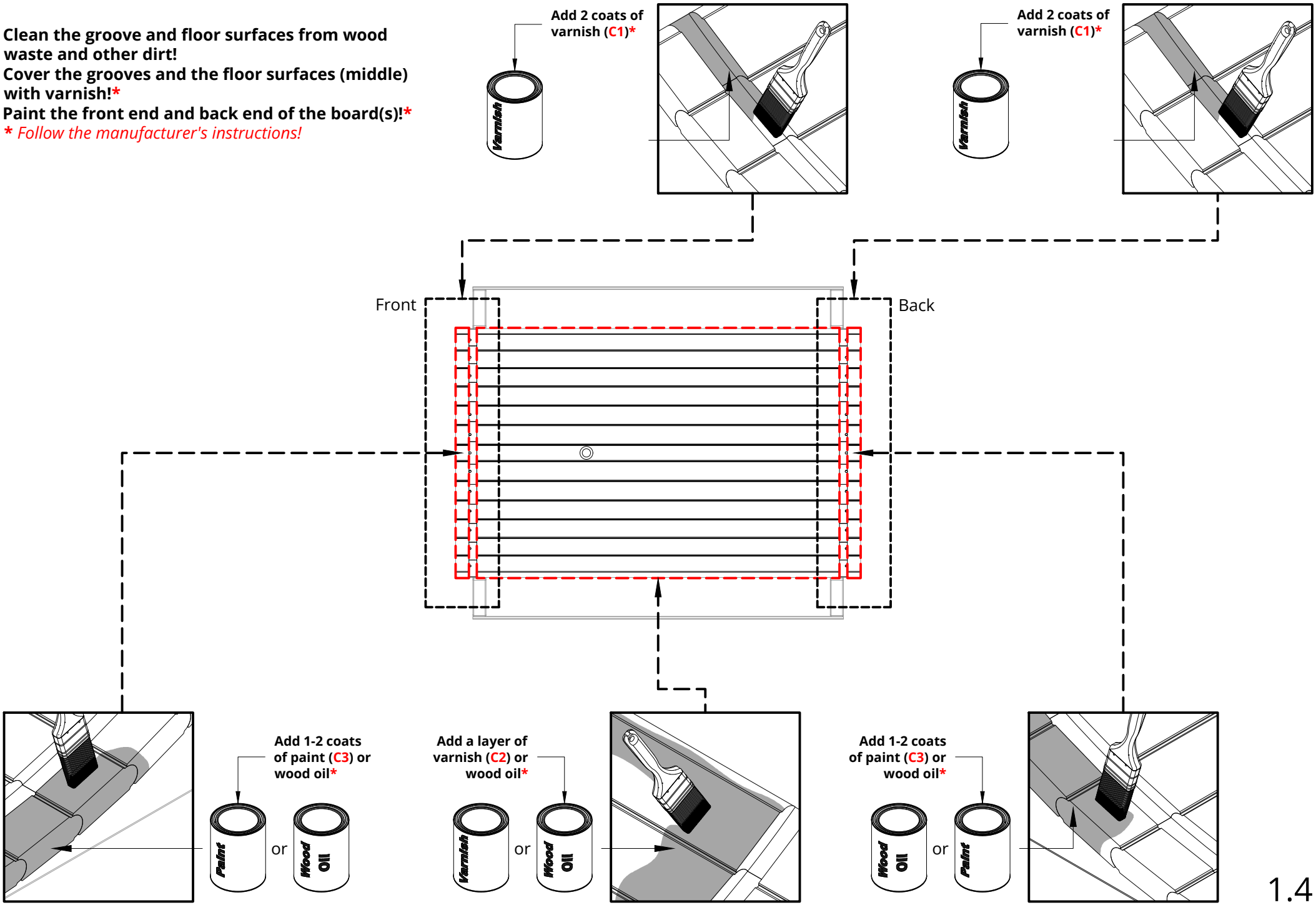

S7	Screws 4,5x80 for Spruce Screws 4,2x75 for Thermo	2

Lift the bottom of the sauna up on one side and install some aids!
Clean the bottom surface!
Cover the surface with paint!*
Install a piece of drain pipe V1!
Install the rubber seal R1!
Remove boards B2.1!
*** *Follow the manufacturer's instructions!***

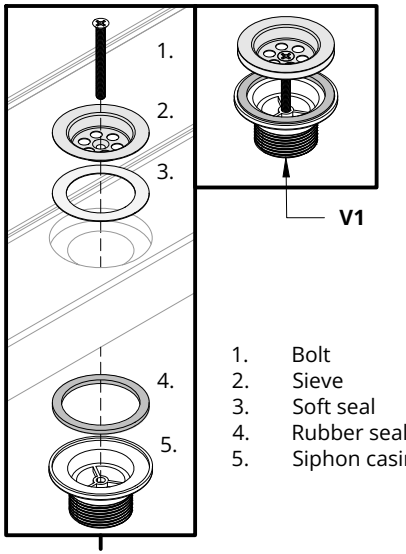

1. Bolt
2. Sieve
3. Soft seal
4. Rubber seal
5. Siphon casing

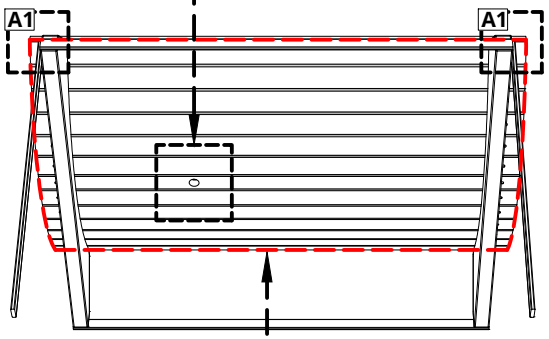

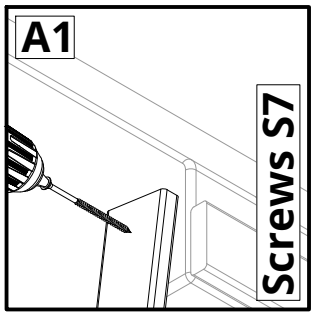

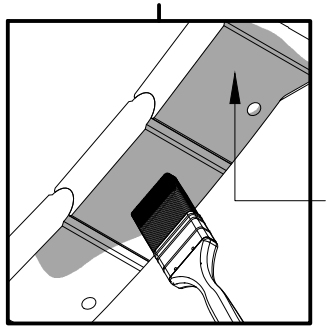

Add 1-2 coats of paint (C3) or wood oil**

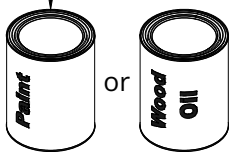

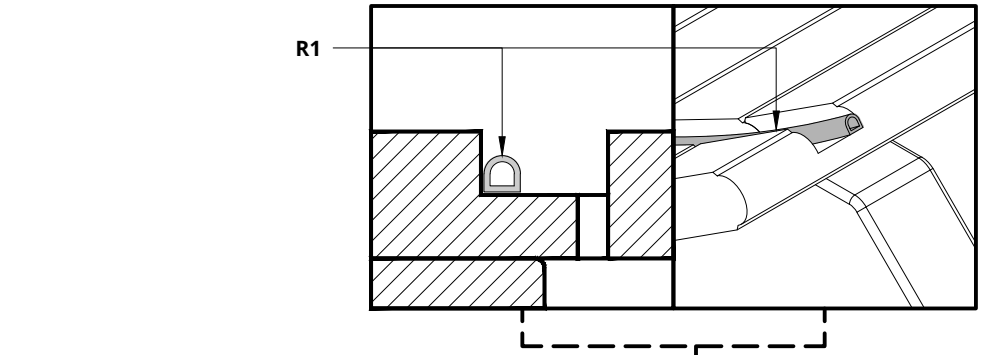

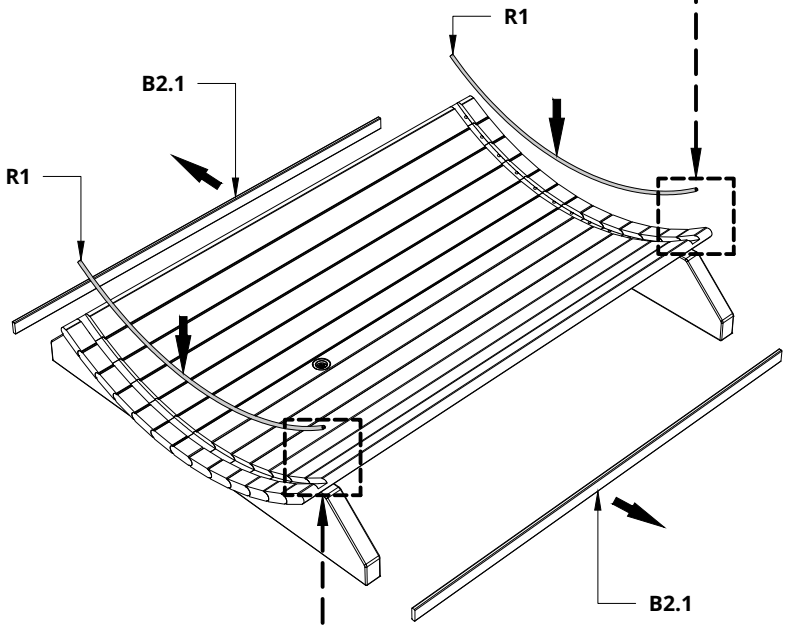

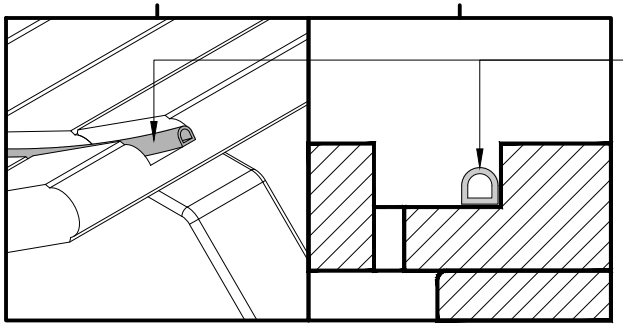

S5	Screws 4,5x60 for Spruce Screws 4,2x55 for Thermo	4
S7	Screws 4,5x80 for Spruce Screws 4,2x75 for Thermo	4

Please countersink the screw head(s)!
Assemble and prepare of the front wall!
Fasten the parts with screws and jigs!
Clean the edge and the outer surface of the front wall from wood waste and other dirt!
Varnish the edge of the wall from the bottom to middle!*
Cover the wall outer surface with paint!*
** Follow the manufacturer's instructions!*

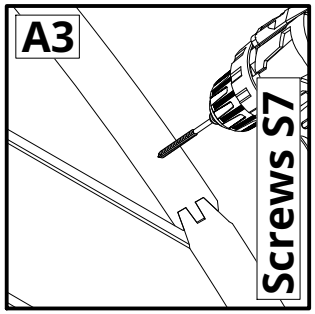

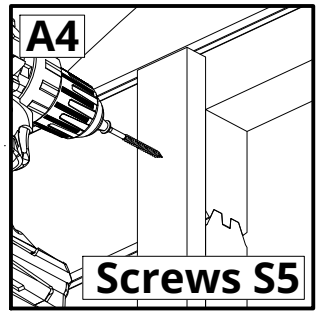

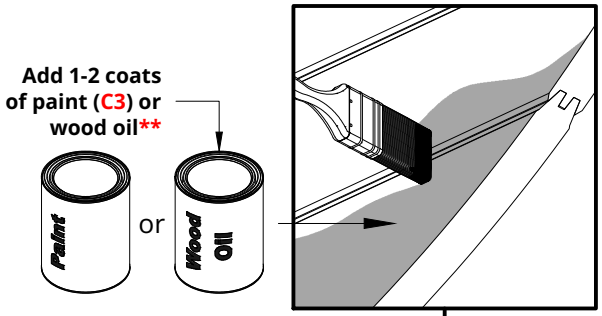

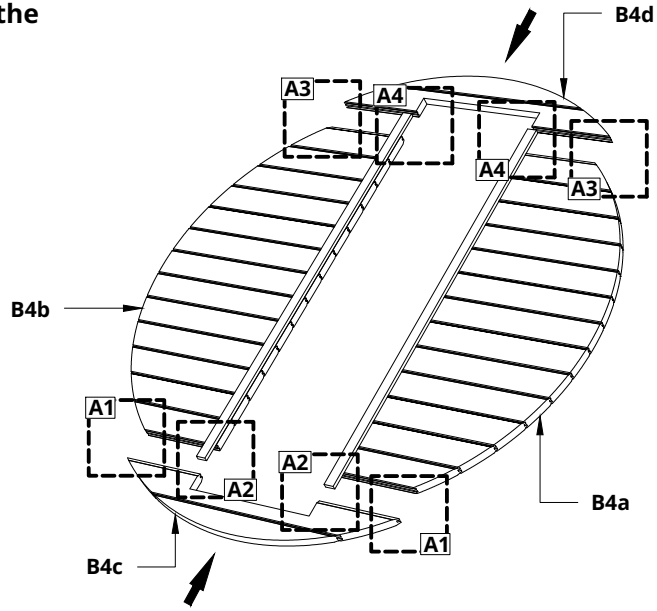

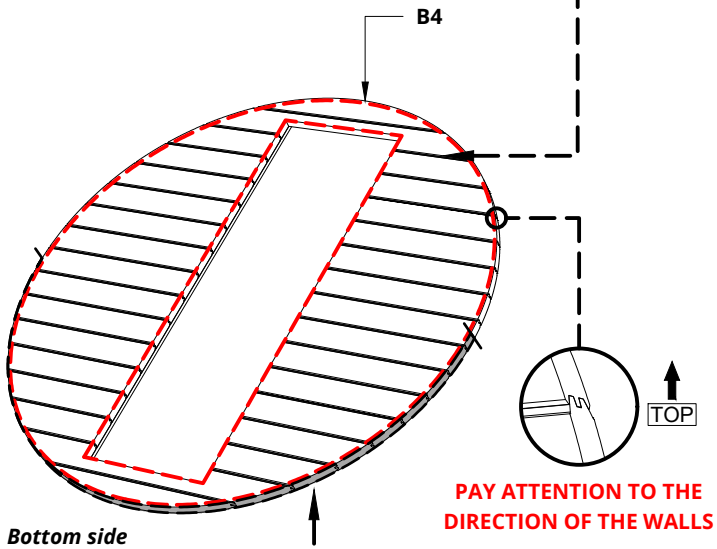

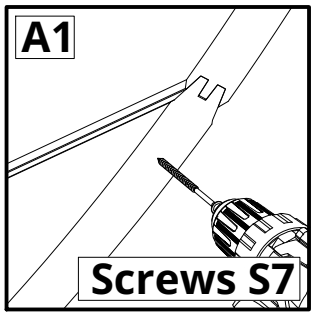

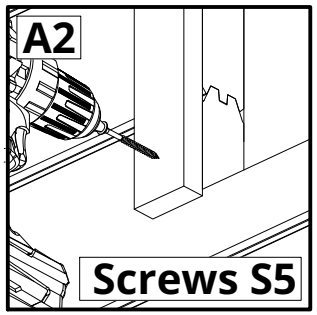

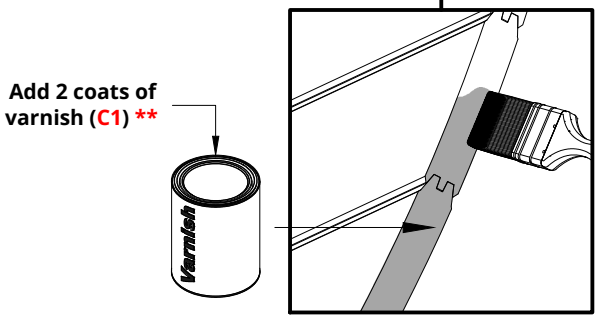

S5	Screws 4,5x60 for Spruce Screws 4,2x55 for Thermo	12

Only necessary for a glass wall version!
Please countersink the screw head(s)!
Assemble and prepare of the front wall!
Remove the door moldings (B7a)!
Use glue between the B4a and B4b!
Fasten the parts with screws and jigs!
Let the glue dry!
Clean the edge of the wall from wood waste and other dirt!
Varnish the edge of the wall from the bottom to middle!*
** Follow the manufacturer's instructions!*

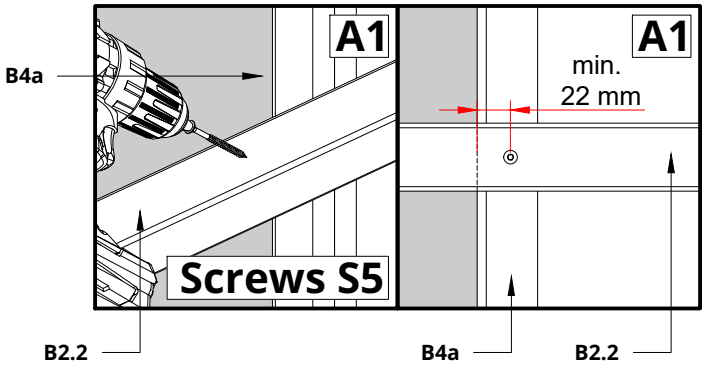

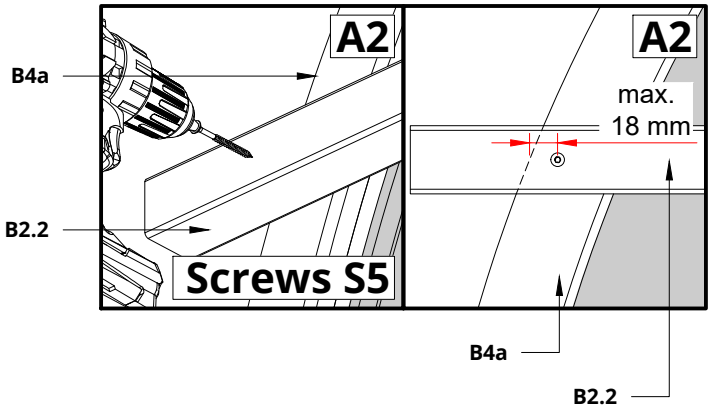

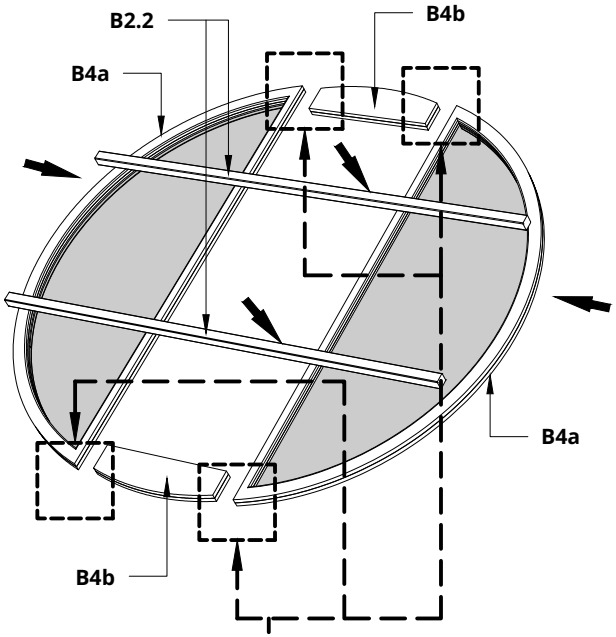

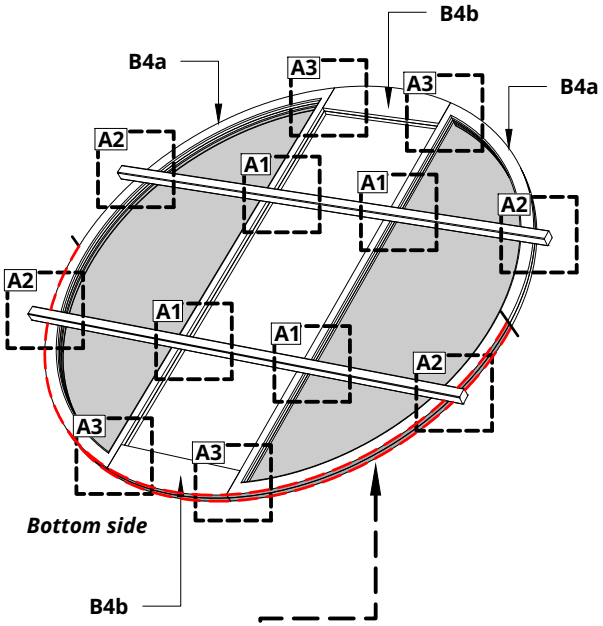

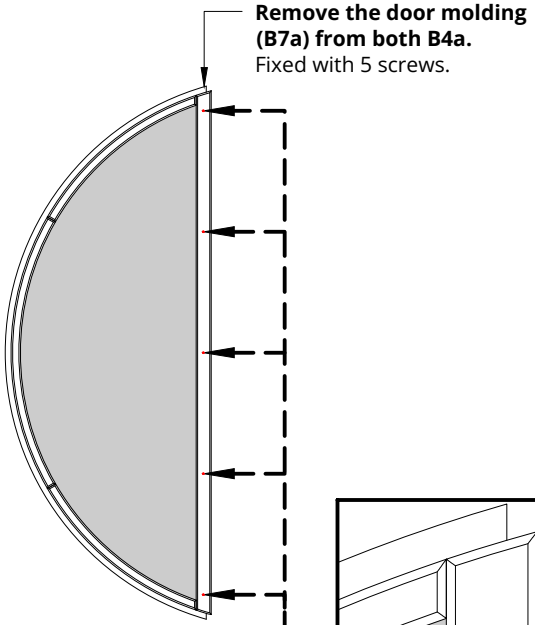

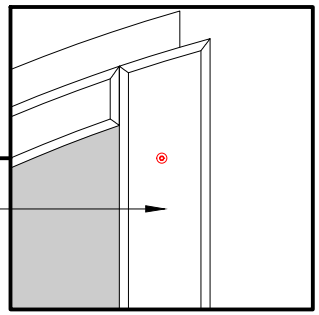

Remove the door molding (B7a) from both B4a
Fixed with 5 screws

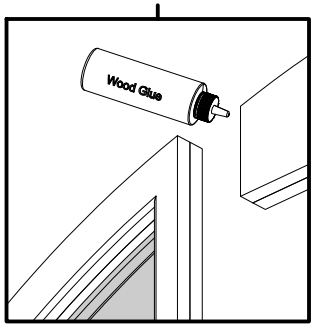

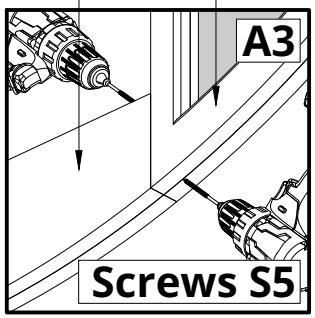

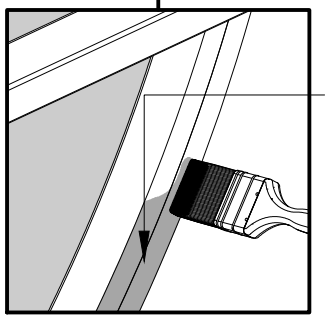

Add 2 coats of varnish (C1)**

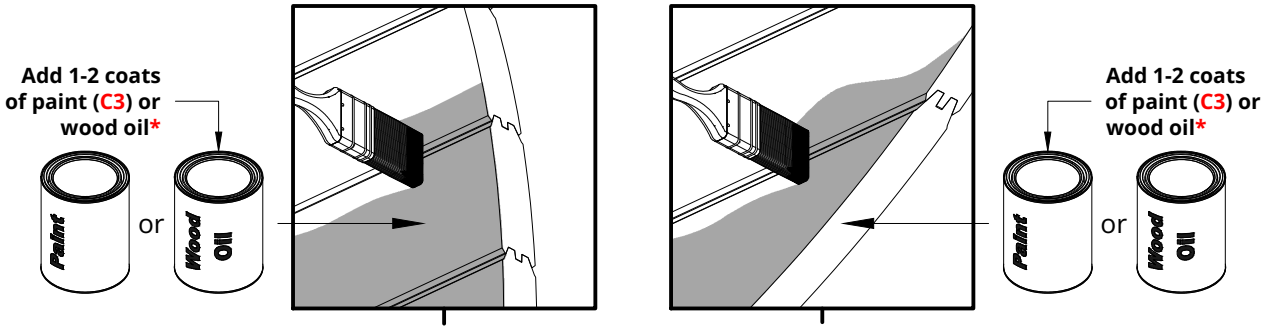

Preparation of the back wall(s)!
Clean the edge of the lower part of the back wall and the outer surface from wood waste and other dirt!
Varnish the lower edge of the back wall from the bottom to middle!*
Cover the lower part (and upper part) of the back wall outer surface with paint!***
** Follow the manufacturer's instructions!*
*** Only on the wooden back wall*

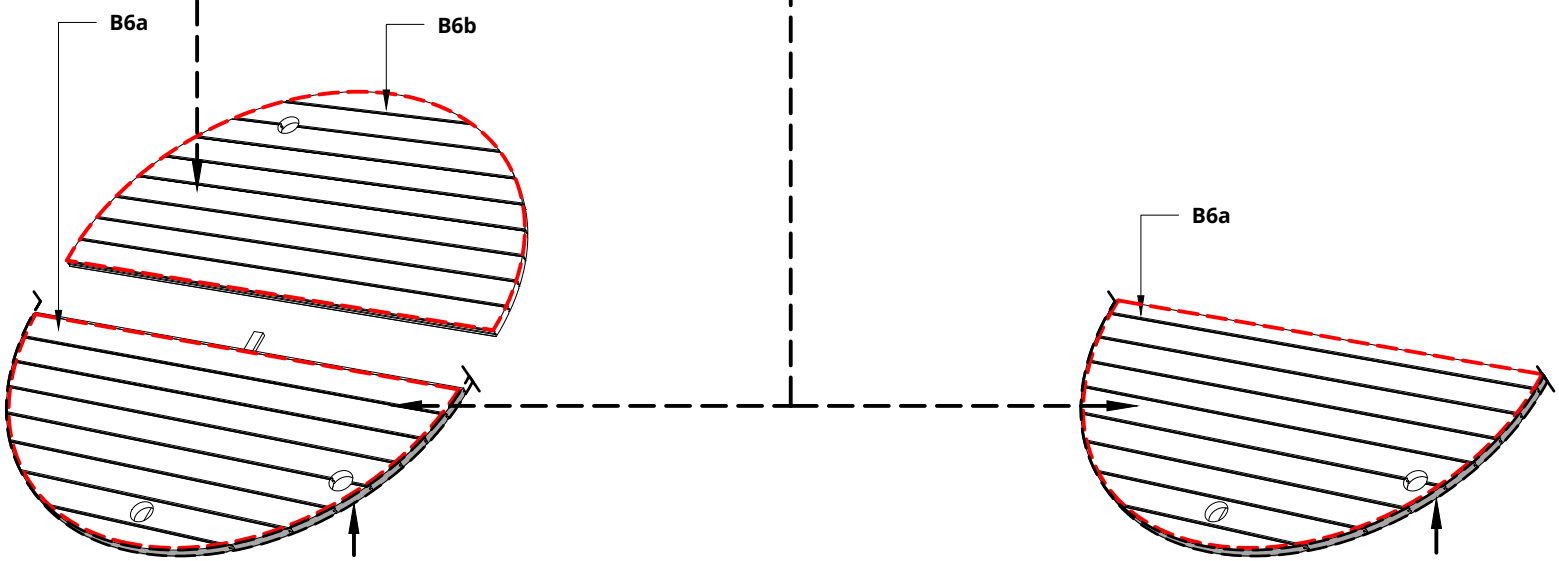

Wooden back wall (lower and upper part)

Half panoramic back wall (lower part)

S2	Screws 3x40	10
S3.2	Screws 4,5x50	5

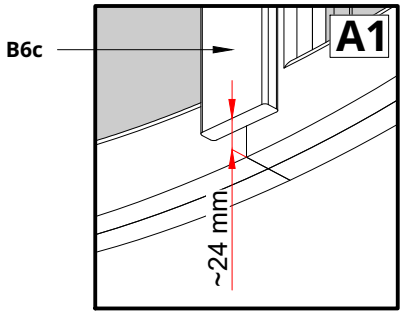

Suggestions!
Drill small hole(s) for the screws in the window(s) moldings before screwing.

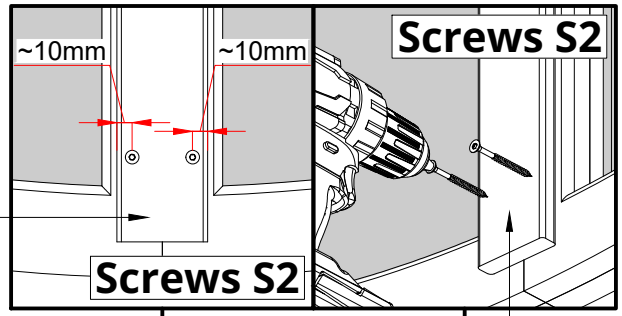

Only necessary for a* panoramic back wall *version!
Please countersink the screw head(s)!
Assemble and prepare of the panoramic back wall!
Use glue between the B6a and B6b!
Fasten the parts with screws and Let the glue dry!
Install the wall molding B6c with 10 screws
Clean the edge of the wall from wood waste and other dirt!
Varnish the edge of the wall from the bottom to middle!*
** Follow the manufacturer's instructions!*

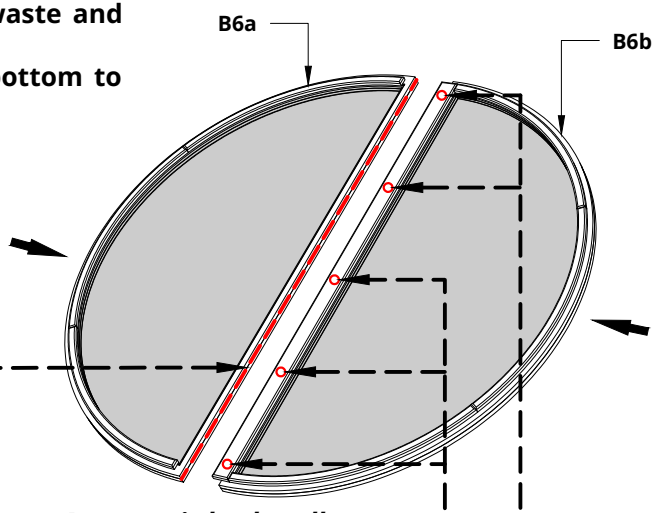

Panoramic back wall
(the outer half)

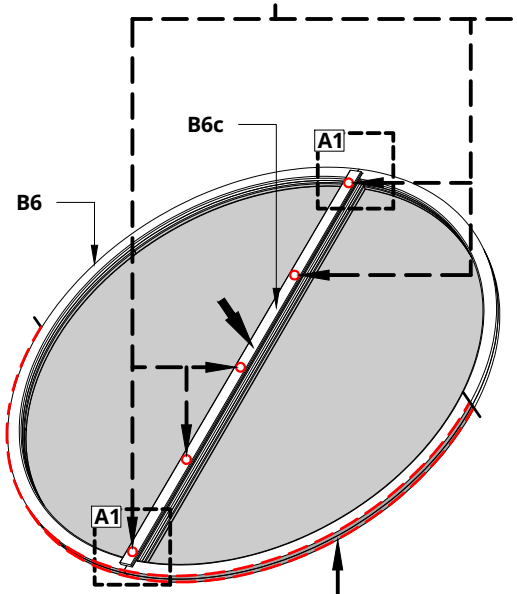

Panoramic back wall
(the inner half)

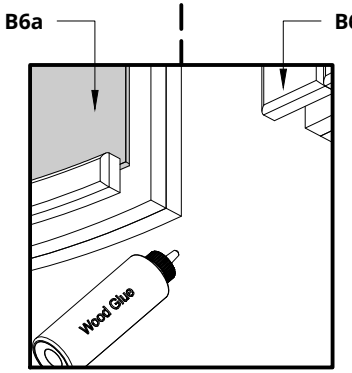

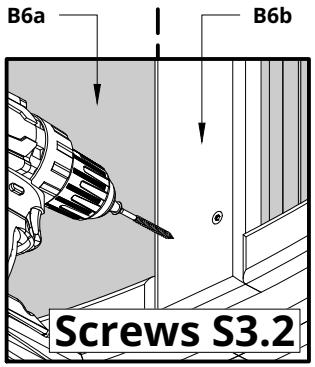

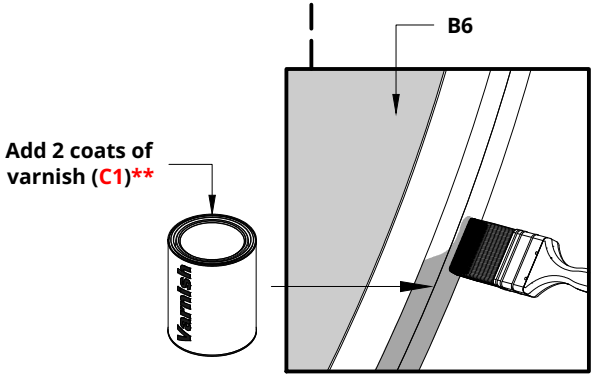

Preparation for side wall boards.

Before doing the processes, clean the sidewall boards from wood waste and other dirt!

** Follow the manufacturer's instructions!*

Boards	First ones		The following ones					
	B3a	B3b	B3a	B3b	B3a	B3b	B3a	B3b
Process 1	✓	✓	✓	✓	✓	✓	✗	✗
Process 2	✓	✓	✓	✓	✓	✓	✓	✓
Process 3	✓	✓	✓	✓	✗	✗	✗	✗
Process 4	✓	✓	✗	✗	✗	✗	✗	✗
Label them	1L	1R	2L	2R	3L	3R	4L	4R
Quantity	5	5	6	6	2	2	14	14

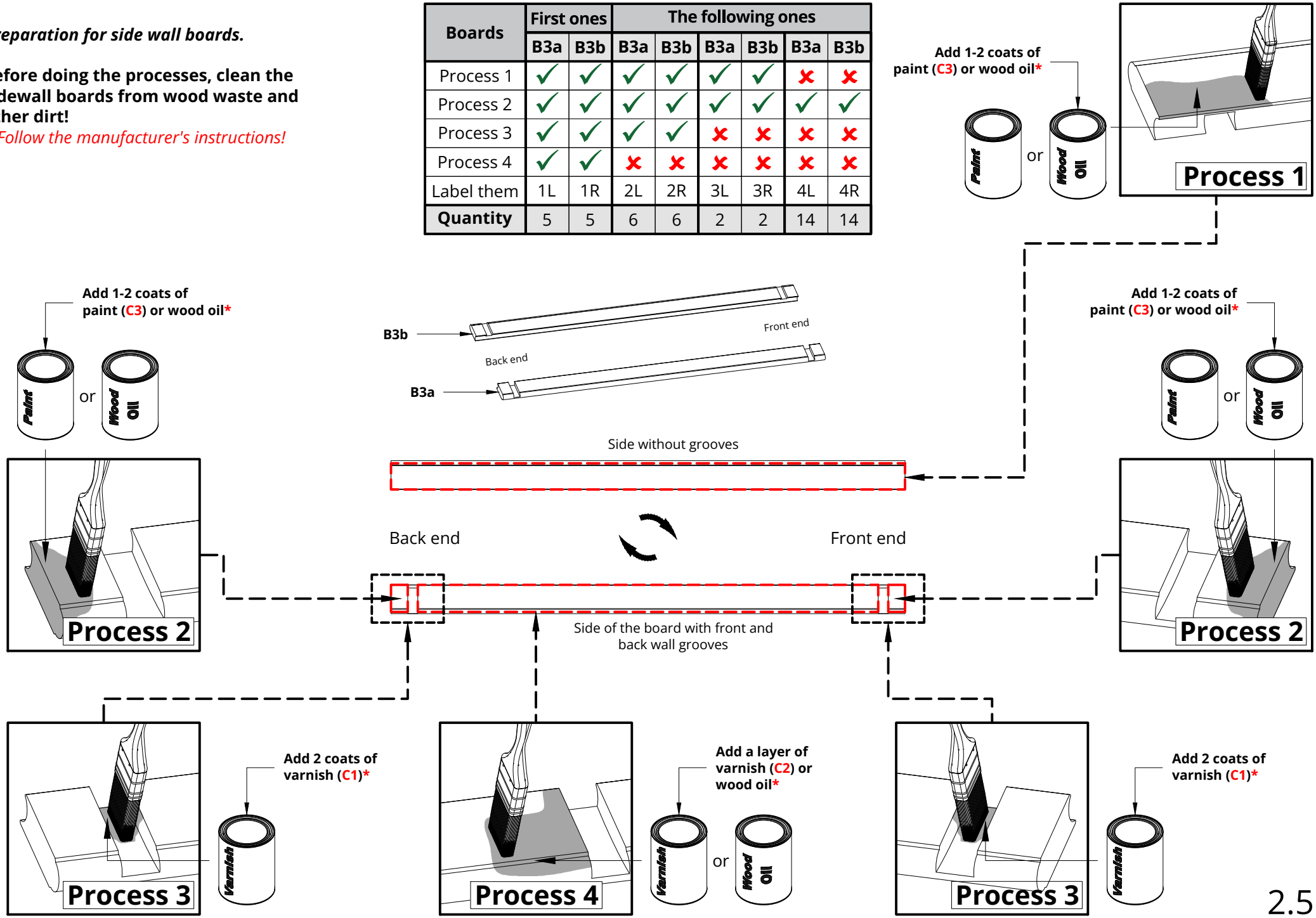

S5	Screws 4,5x60 for Spruce Screws 4,2x55 for Thermo	8

NB! use a level

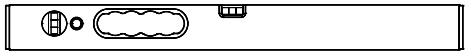

Please countersink the screw head(s)!
Make sure that the walls are centered in relation to the bottom!
Install safety boards on walls, use boards B3a and B3b, that are labeled as 4L and 4R!
Remove the back wall connection strip(s)!
** Depends on the choice of sauna wall!*

The same steps apply to the bottom part of the panoramic back wall

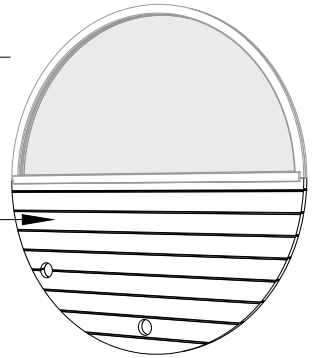

PAY ATTENTION TO THE DIRECTION OF THE WALLS!

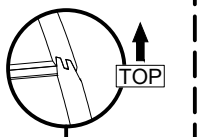

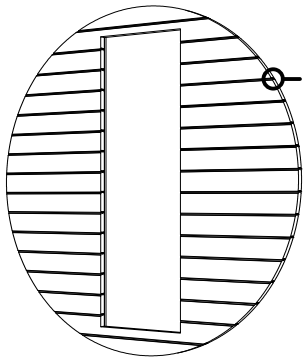

Wooden front wall

OR

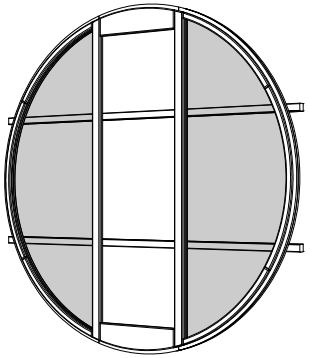

Glass front wall

B4 depends on the choice of sauna front walls

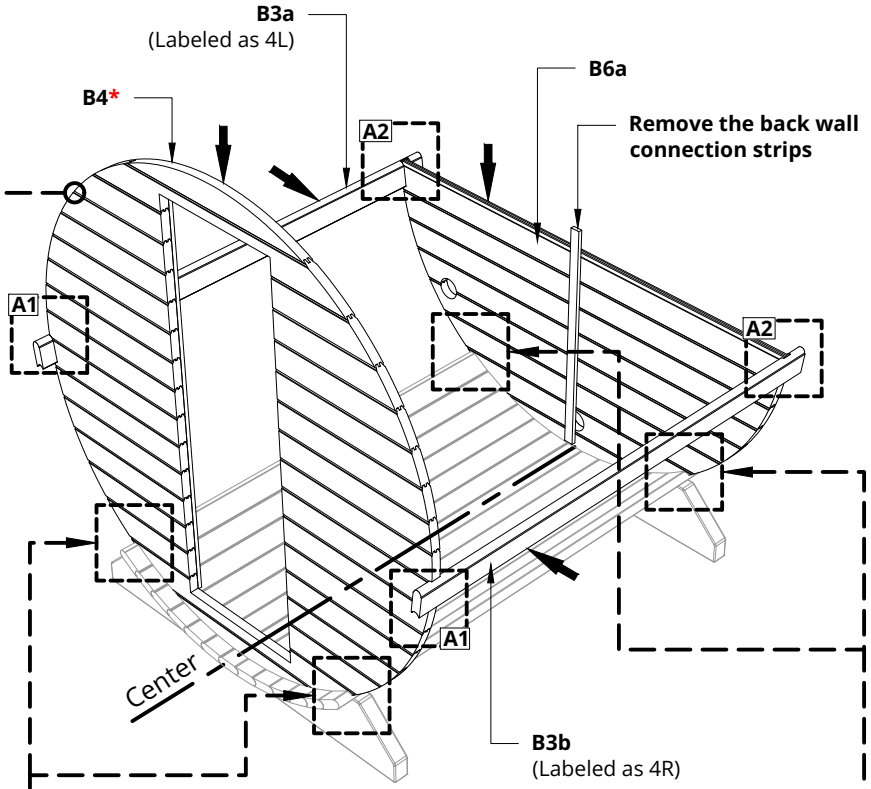

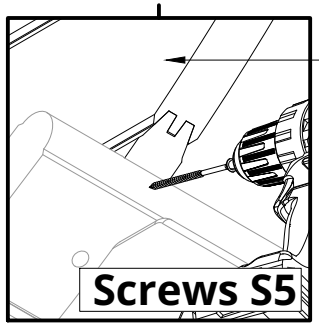

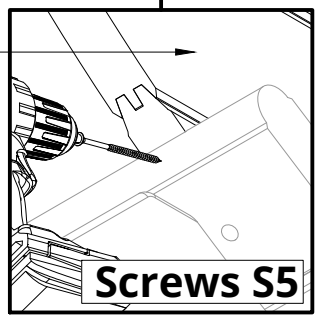

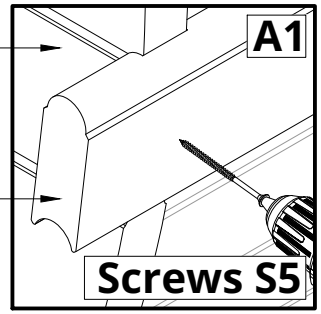

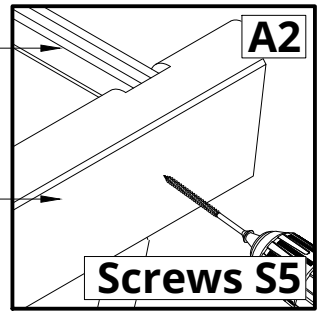

S5	Screws 4,5x60 for Spruce Screws 4,2x55 for Thermo	4
S7	Screws 4,5x80 for Spruce Screws 4,2x75 for Thermo	2

Please countersink the screw head(s)!
Install the upper part of the back wall B6b and the upper safety board(s)!
Remove the back wall connection strip(s)!
Panorama construction instructions are on the next page!
** Depends on the choice of sauna wall!*

B4 depends on the choice of sauna front walls

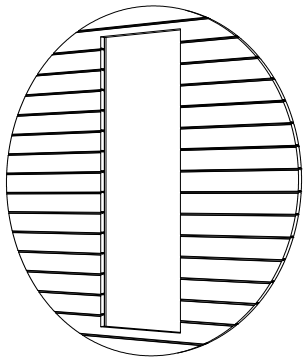

Wooden front wall

OR

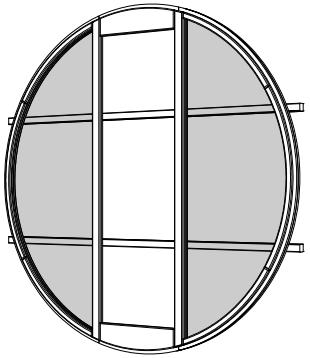

Glass front wall

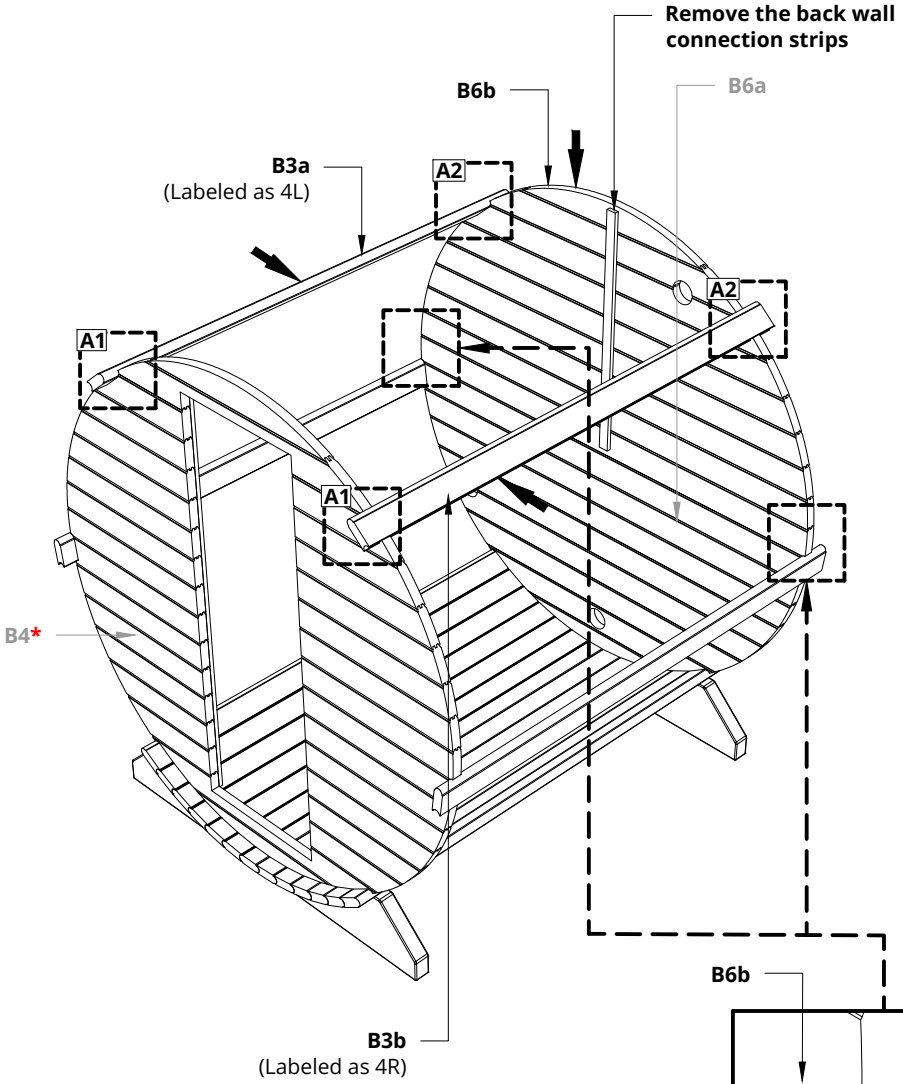

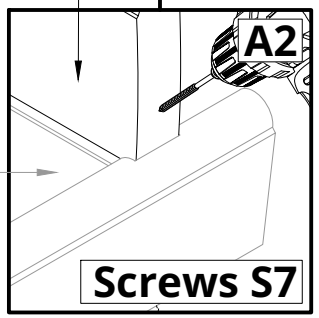

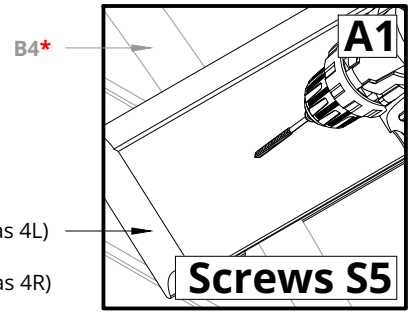

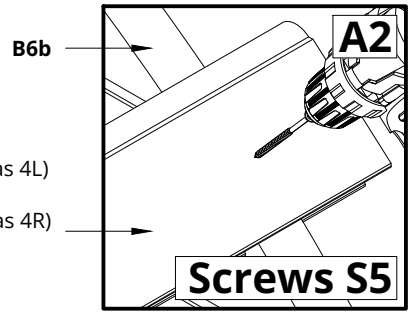

S2	Screws 3x40	5
S5	Screws 4,5x60 for Spruce Screws 4,2x55 for Thermo	4
S7	Screws 4,5x80 for Spruce Screws 4,2x75 for Thermo	2

NB! use a level

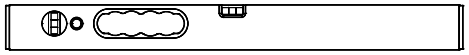

Only necessary for a panorama back wall version!
Install the upper part of the back wall B6b and the upper safety board(s)!
Install a panoramic wall molding!
Full panorama construction instructions are on the next page!
** Depends on the choice of sauna wall!*

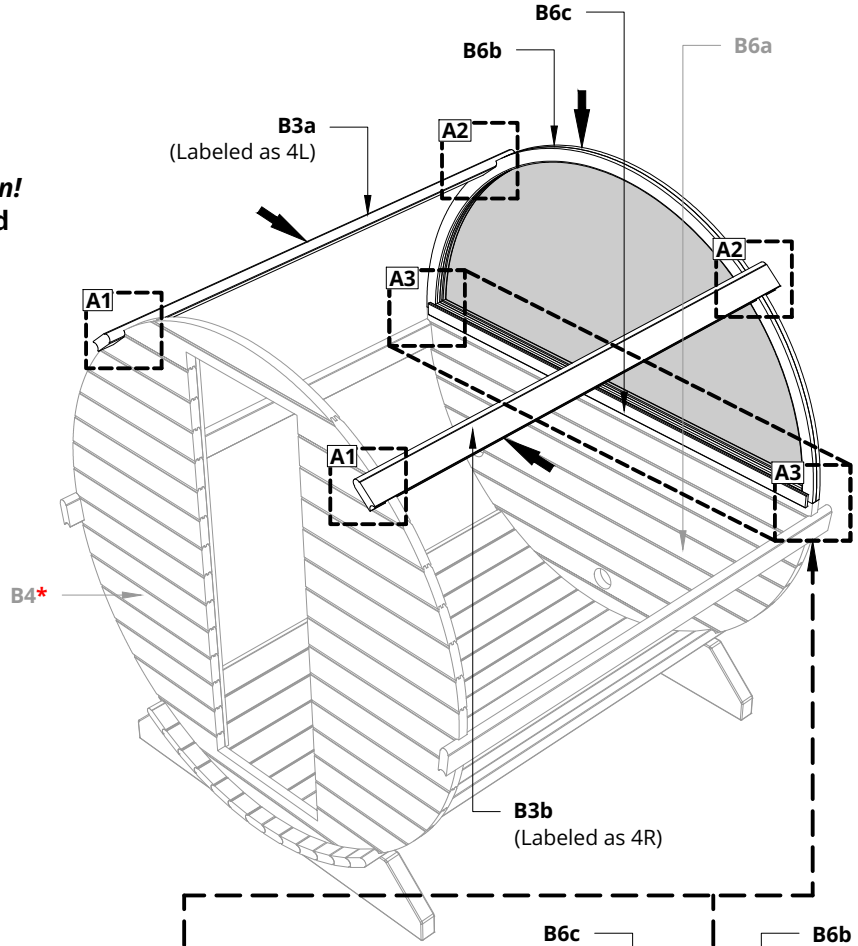

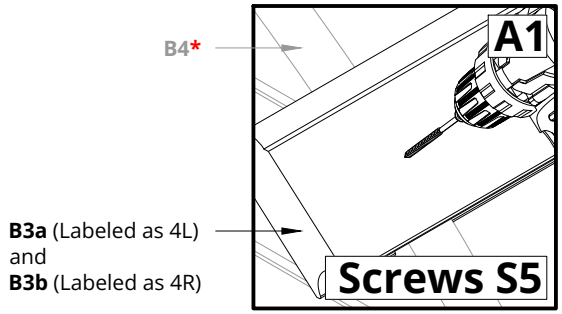

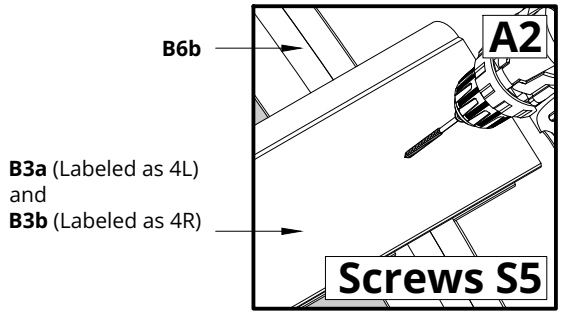

B4 depends on the choice of sauna front walls

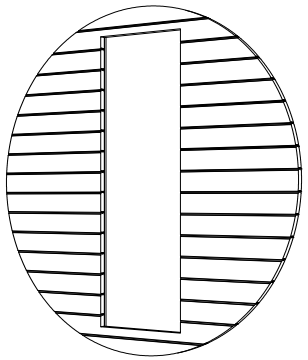

Wooden front wall

OR

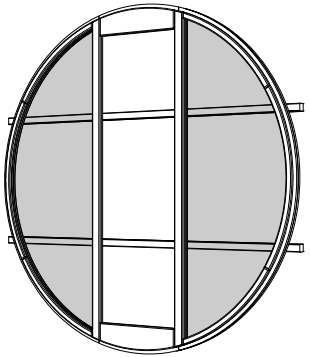

Glass front wall

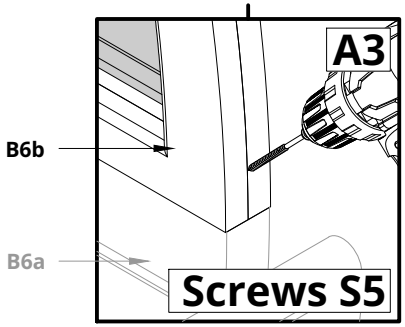

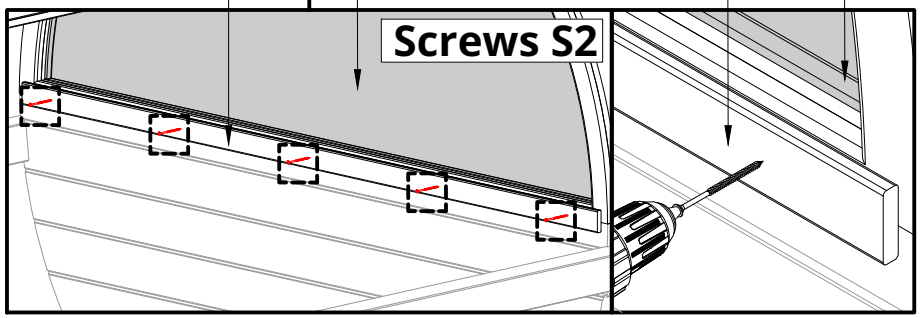

S5	Screws 4,5x60 for Spruce Screws 4,2x55 for Thermo	8

NB! use a level

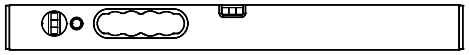

Two people's work!!!
Please countersink the screw head(s)!
Make sure that the walls are centered in relation to the bottom!
Install safety boards on walls, use boards B3a and B3b, that are labeled as 4L and 4R!
** Depends on the choice of sauna wall!*

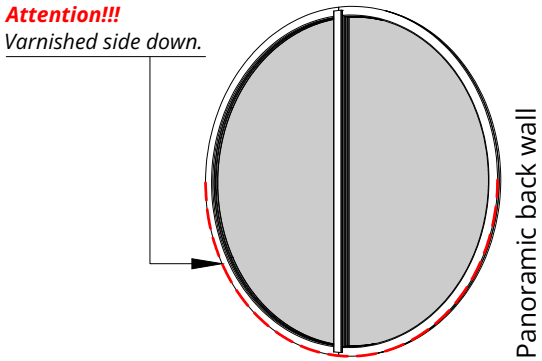

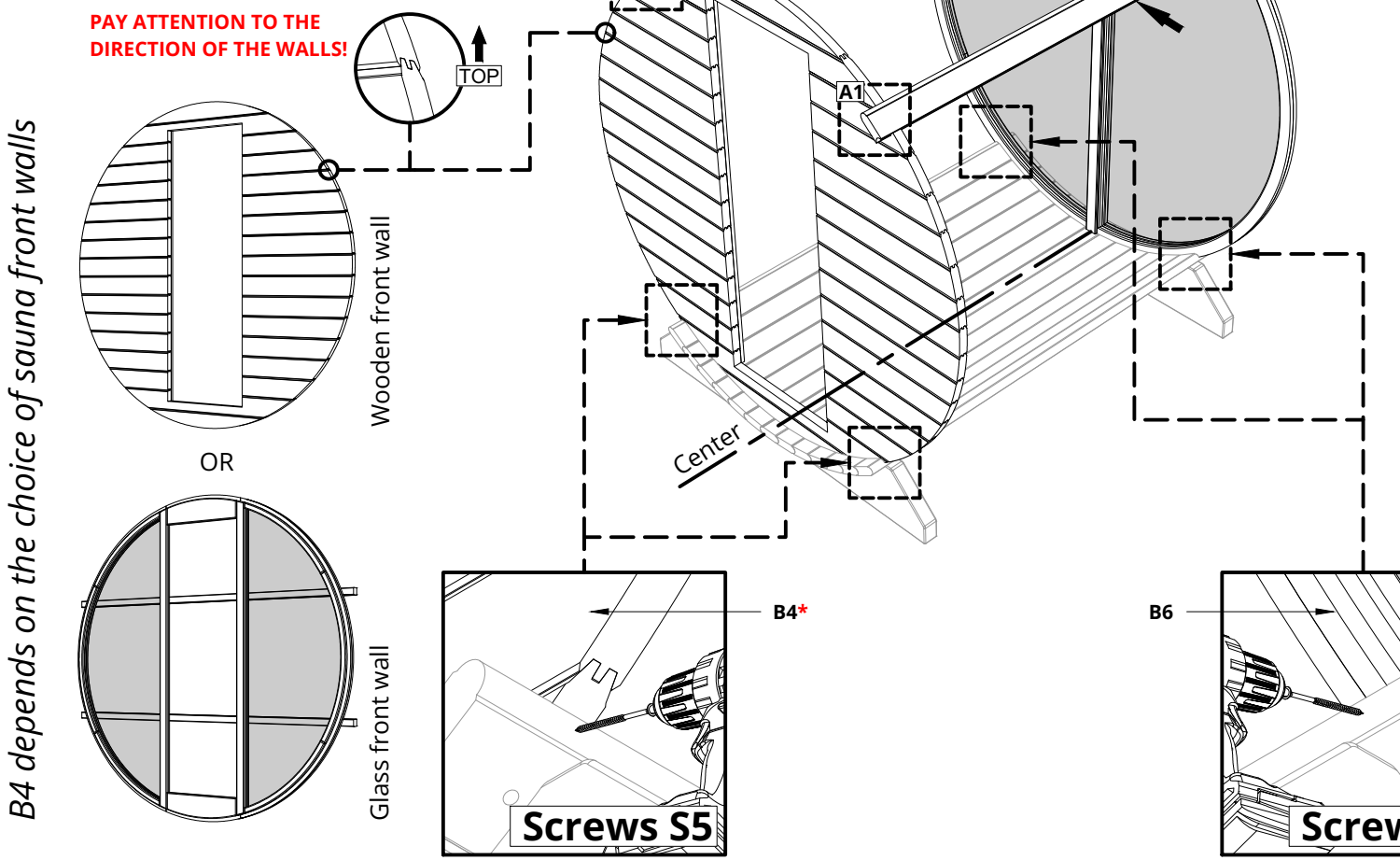

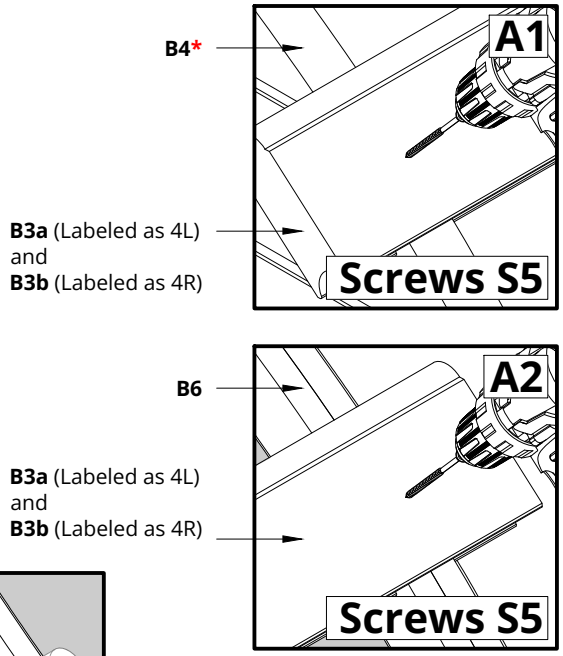

S5	Screws 4,5x60 for Spruce Screws 4,2x55 for Thermo	104

Please countersink the screw head(s)!
Use a rubber mallet to tap the boards into place!
Please do not screw the screws in on the last whole boards immediately!
** Depends on the choice of sauna wall!*
*** For glass wall only!*

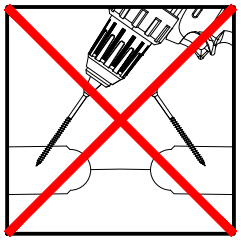

***B3a** left and **B3b** right*

layout of labeled boards

B4 depends on the choice of sauna front walls

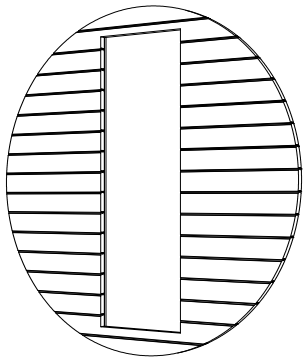

Wooden front wall

OR

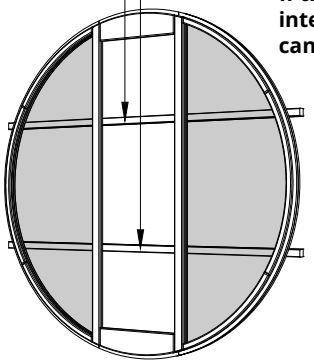

Glass front wall

**** If they start to interfere, they can be removed**

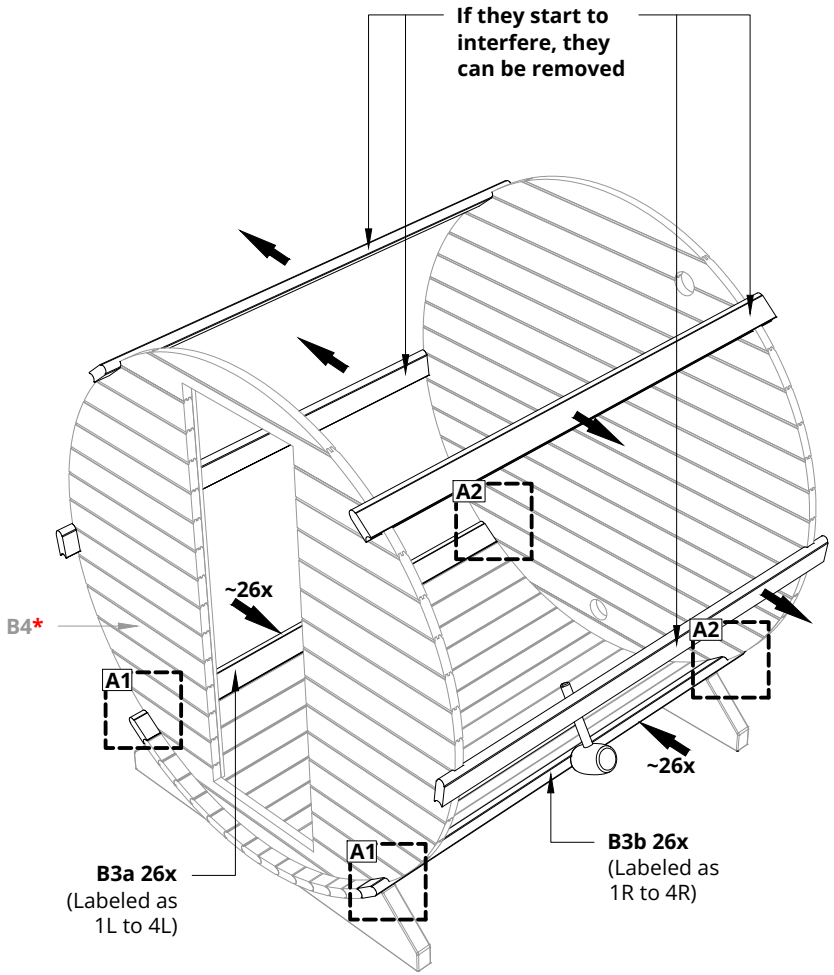

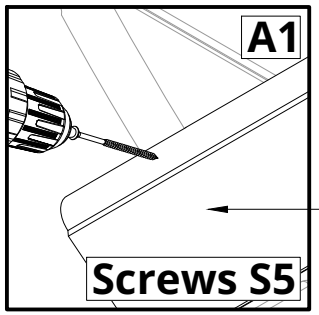

B3a left
(Labeled as 1L to 4L)
B3b right
(Labeled as 1R to 4R)

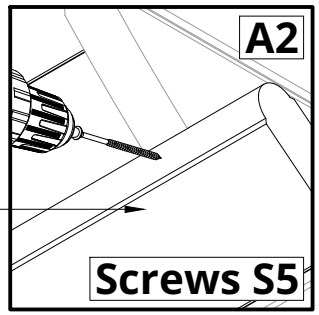

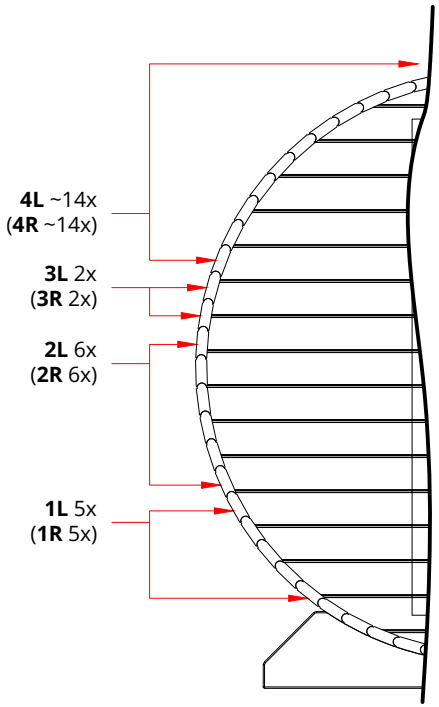

Measure the gap front and back, the dimensions can be different!

Divide the measurement by two and transfer the measurements to the last two boards. Connect the dimensions on the board with a line.

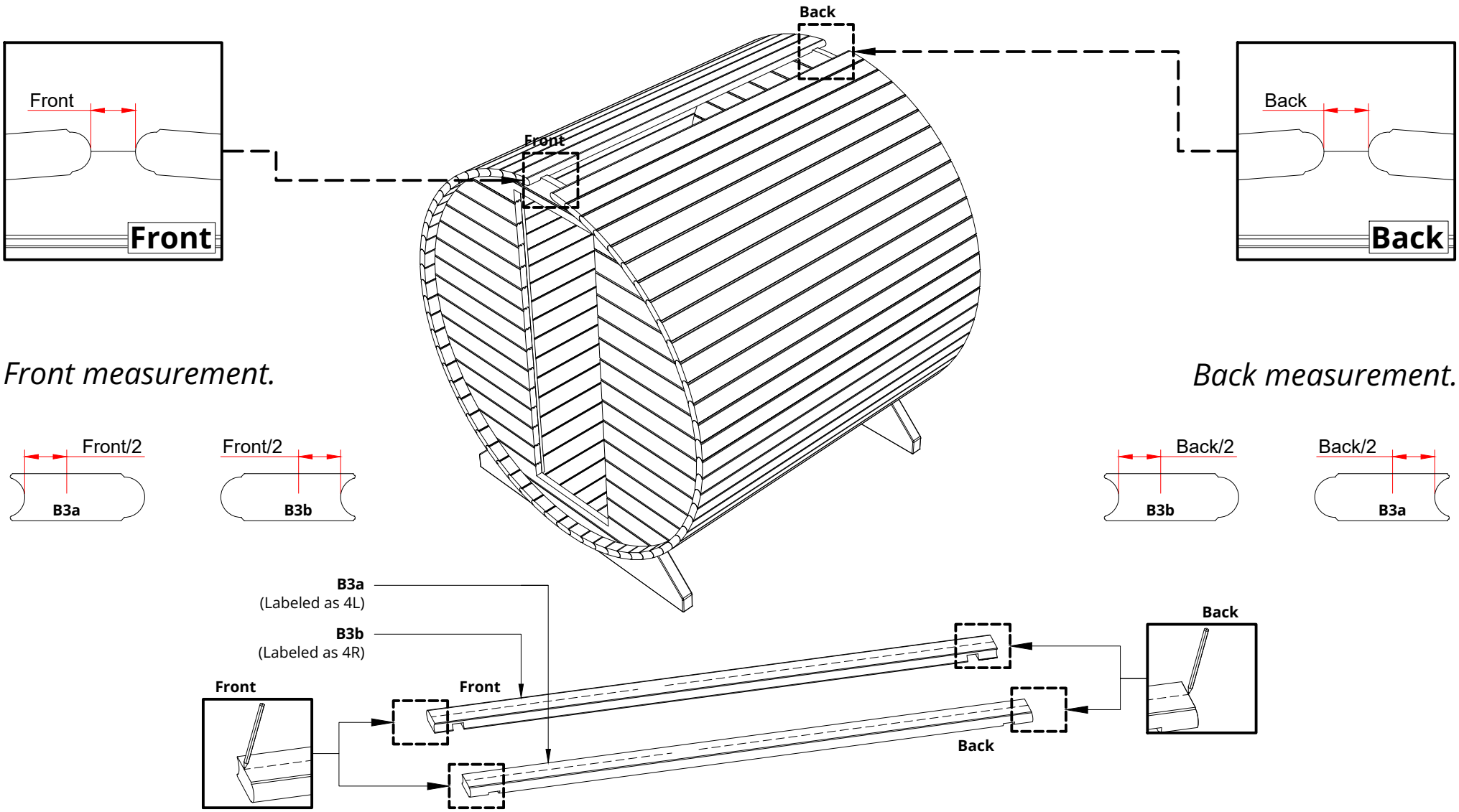

S2...7	Screws 3x40 ... 4,5x80	5
S5	Screws 4,5x60 for Spruce Screws 4,2x55 for Thermo	8

Please countersink the screw head(s)!
Prepare the last board!
Use a rubber mallet to tap the boards in to the cap!

Cut along the marked line to cut off these ends. Glue the two cut boards with wood glue and connect them with 5 pieces of 3x40 ... 4.5x80 screws ***(the length of the screws depends on the final width of the last two planks cut)***. Wipe off excess glue with a cloth and then use sandpaper to smooth out the gap.

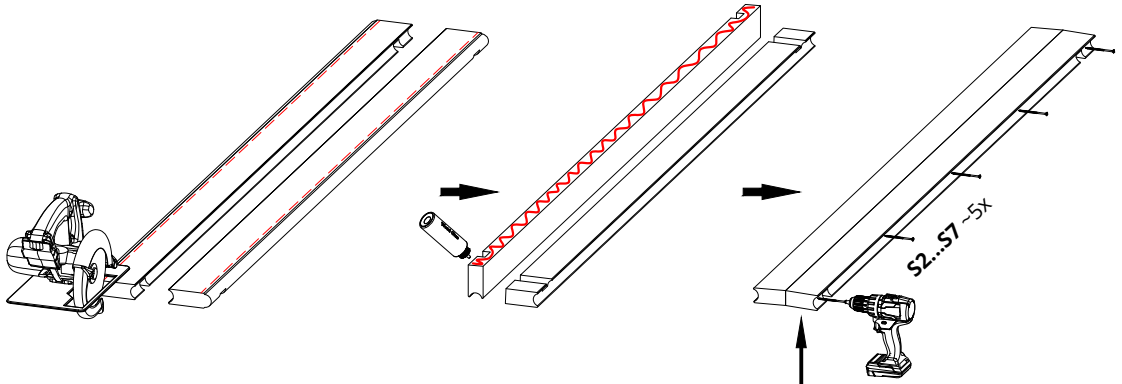

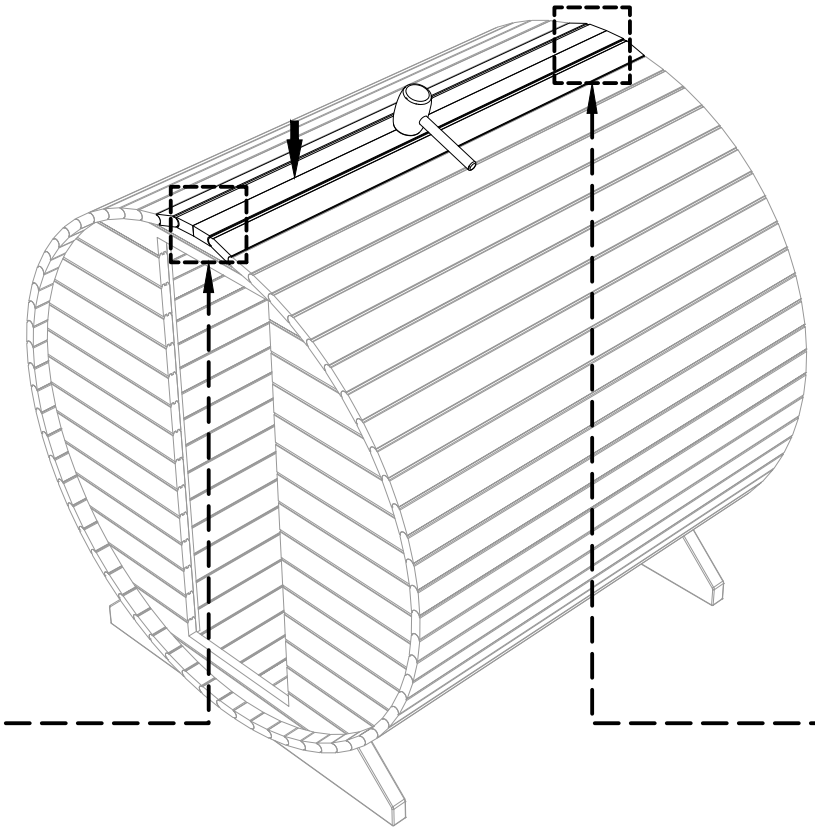

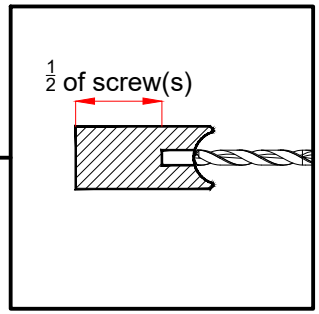

Suggestions!
Drill pockets for screws if the screws do not extend through

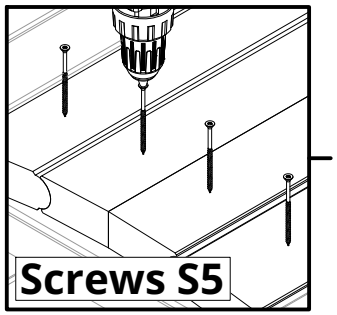

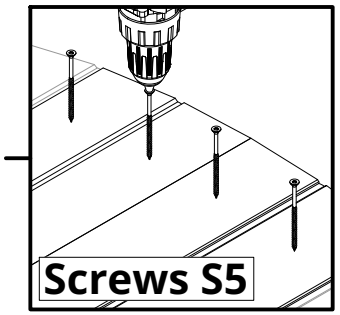

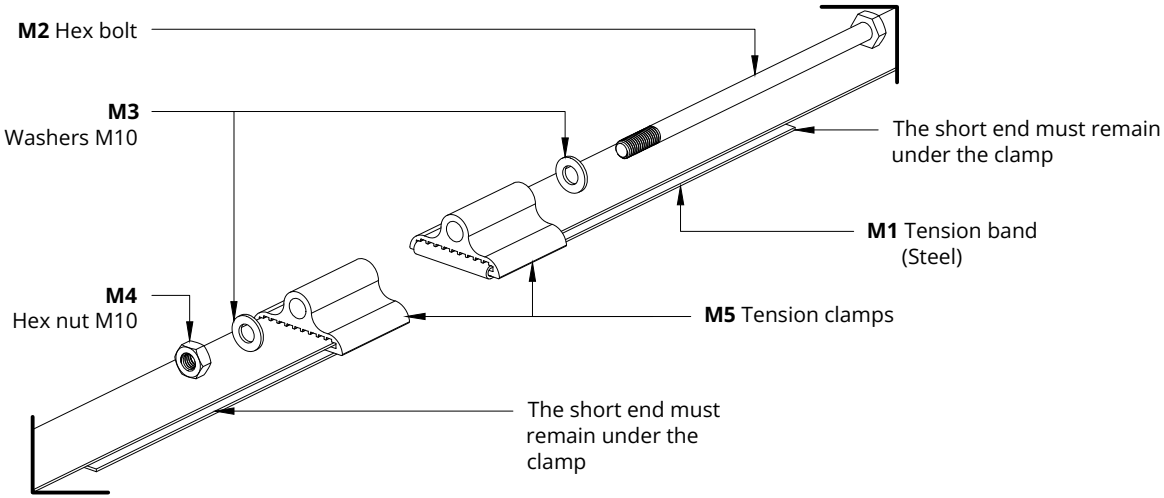

Place the tension bands M1 (Steel band(s)) around the side walls and thread the band(s) into the eyelet as follows (see sketch above).

Hex nuts and bolts must be tightened as long as the boards are stationary in all directions.

The tension band and clamps must be placed as shown in the picture below.

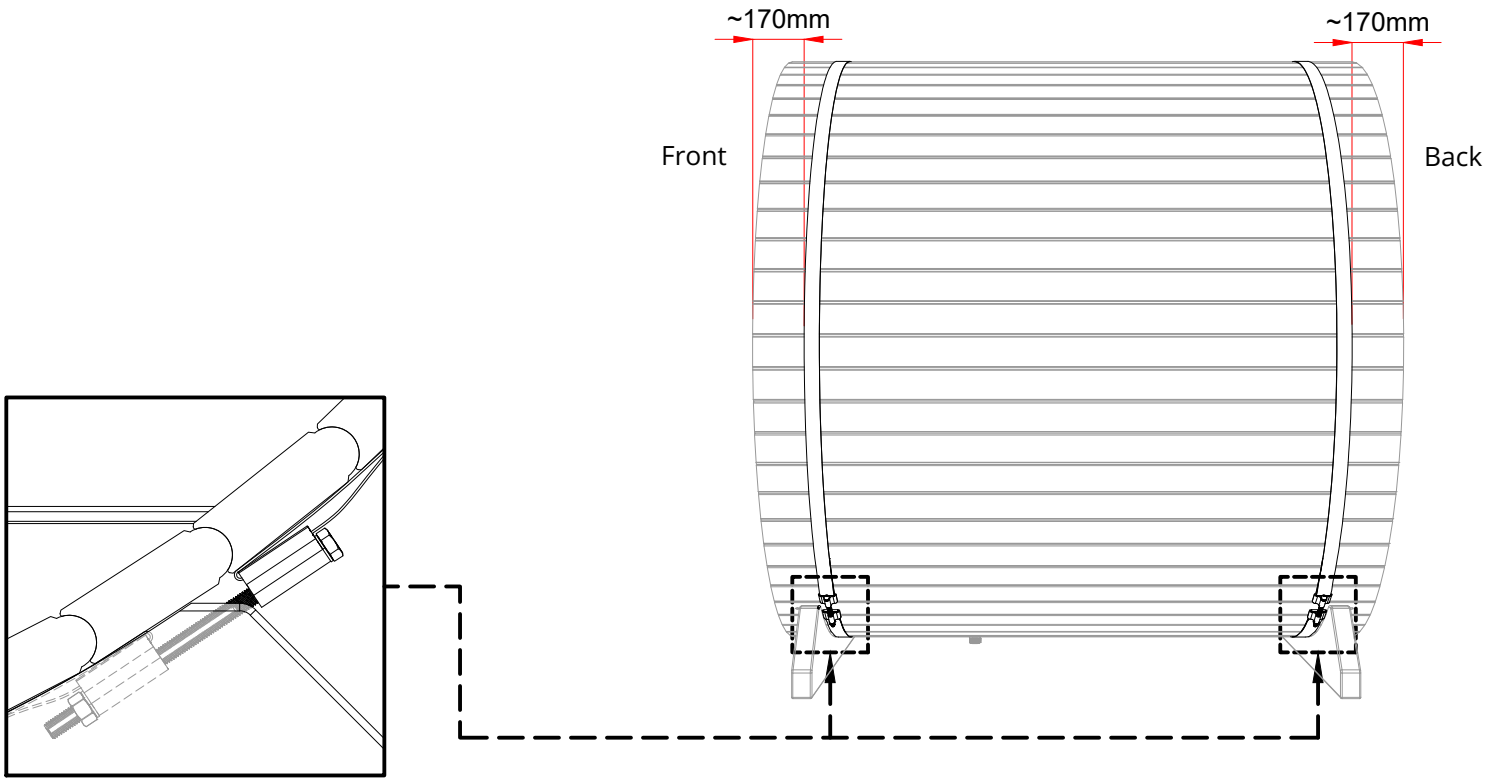

S1	Screws 3x30	12

NB! use a level

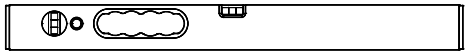

Please countersink the screw head(s)! Height measurements are measured from a straight surface (ground) or from above the sauna!

Install the eaves edge (tin strip) **on the left and right!**

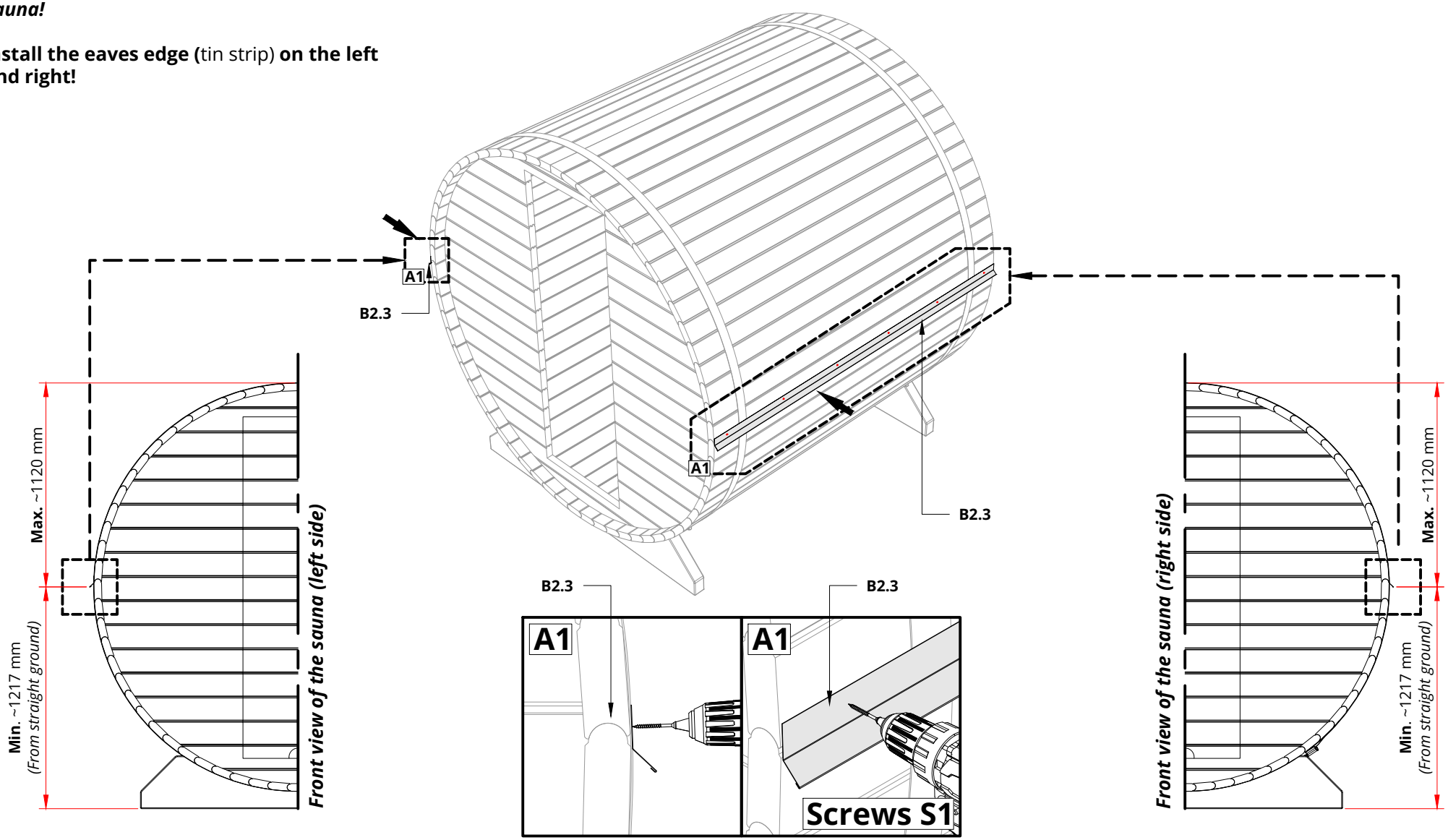

Hexagonal bitumen roof sheet row arrangement for Barrel Saunas.

The base row is installed first, then the first row, etc. up in the middle of the sauna. The sheets that remain over the edge of the sauna wall are cut off and, if possible, used for other rows.

The base row starts at the front end of the sauna, row 1 always starts offset from the front end.

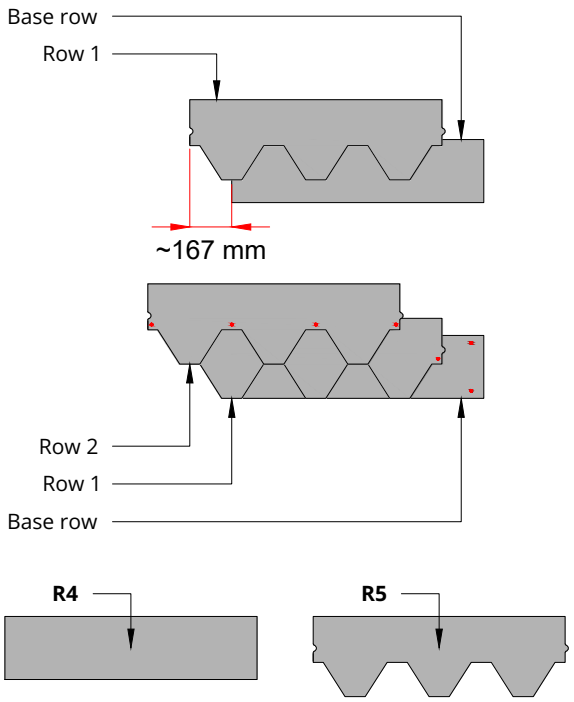

Lerra PURE (Barrel 2.2x2.2)	Qty. R4	9 pcs
	Qty. R5	56 pcs

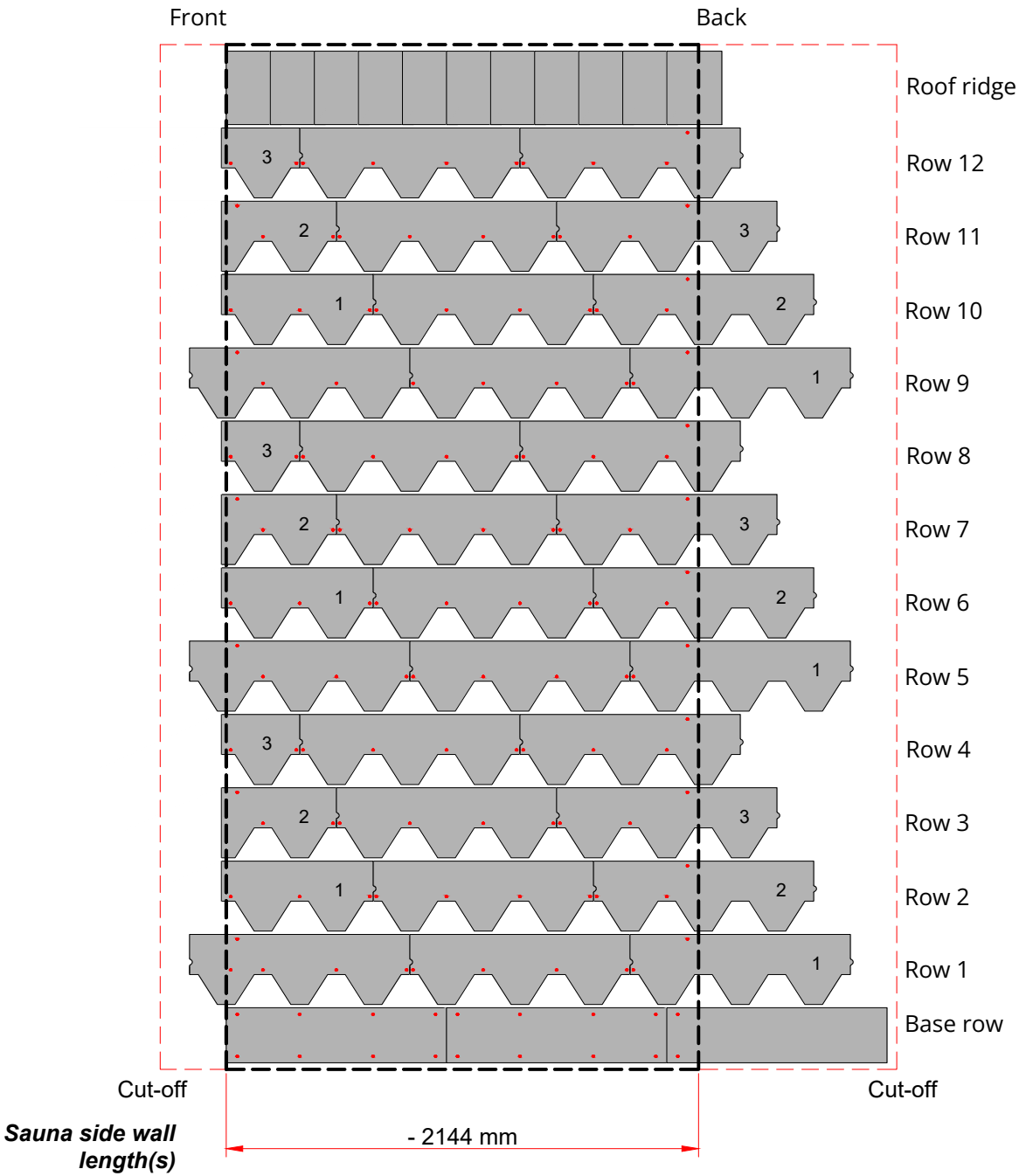

R6	Nail 2,5x25	~36

Sheets are self-adhesive, for better adhesion use a heat source!
The base row starts from the front!
Cut sheets that extend over the edge! (It is only necessary to cut if they extend over the edge!)
Suitable leftovers can be used!
Repeat these steps on the other side as well!

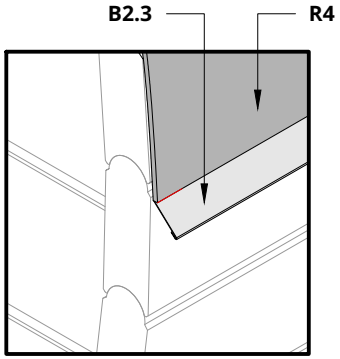

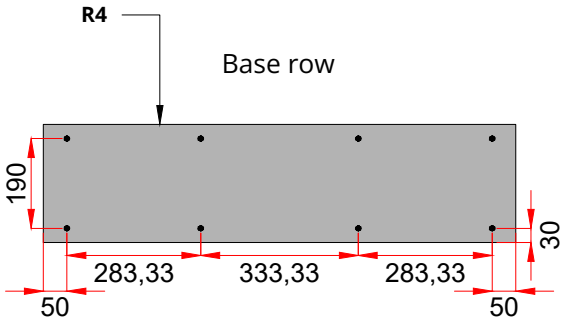

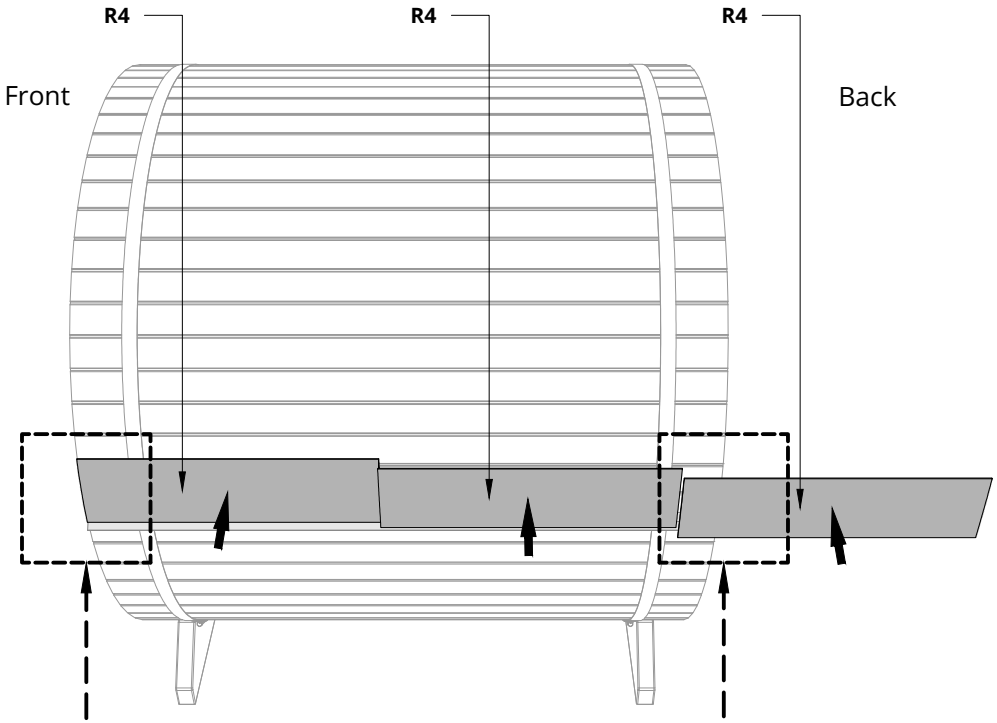

It is only necessary to cut if they extend over the edge!

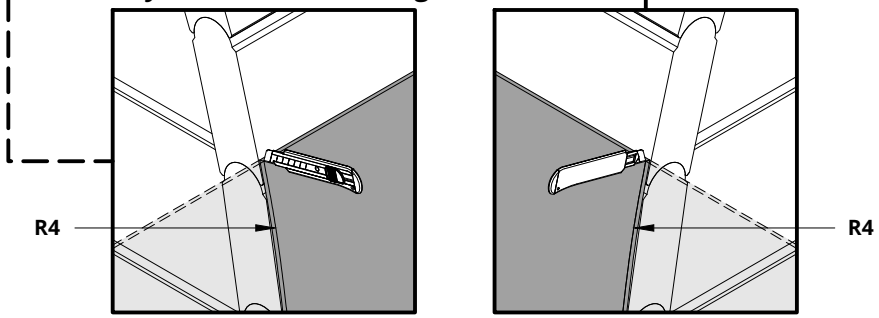

R6	Nail 2,5x25	~250

Sheets are self-adhesive, for better adhesion use a heat source!
The 1.row starts at the front and offset!
Cut sheets that extend over the edge!
Suitable leftovers can be used!
Repeat these steps on the other side as well!

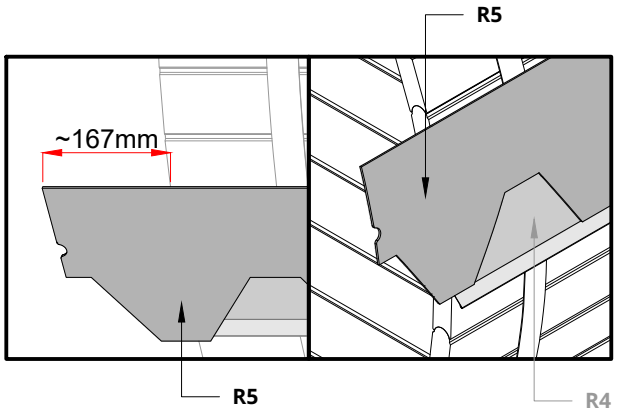

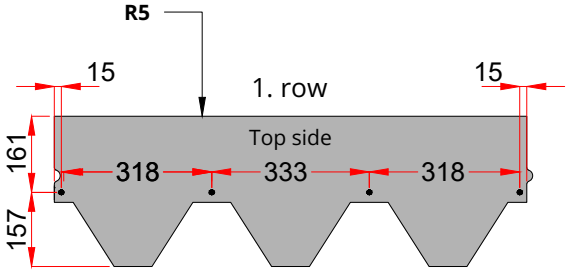

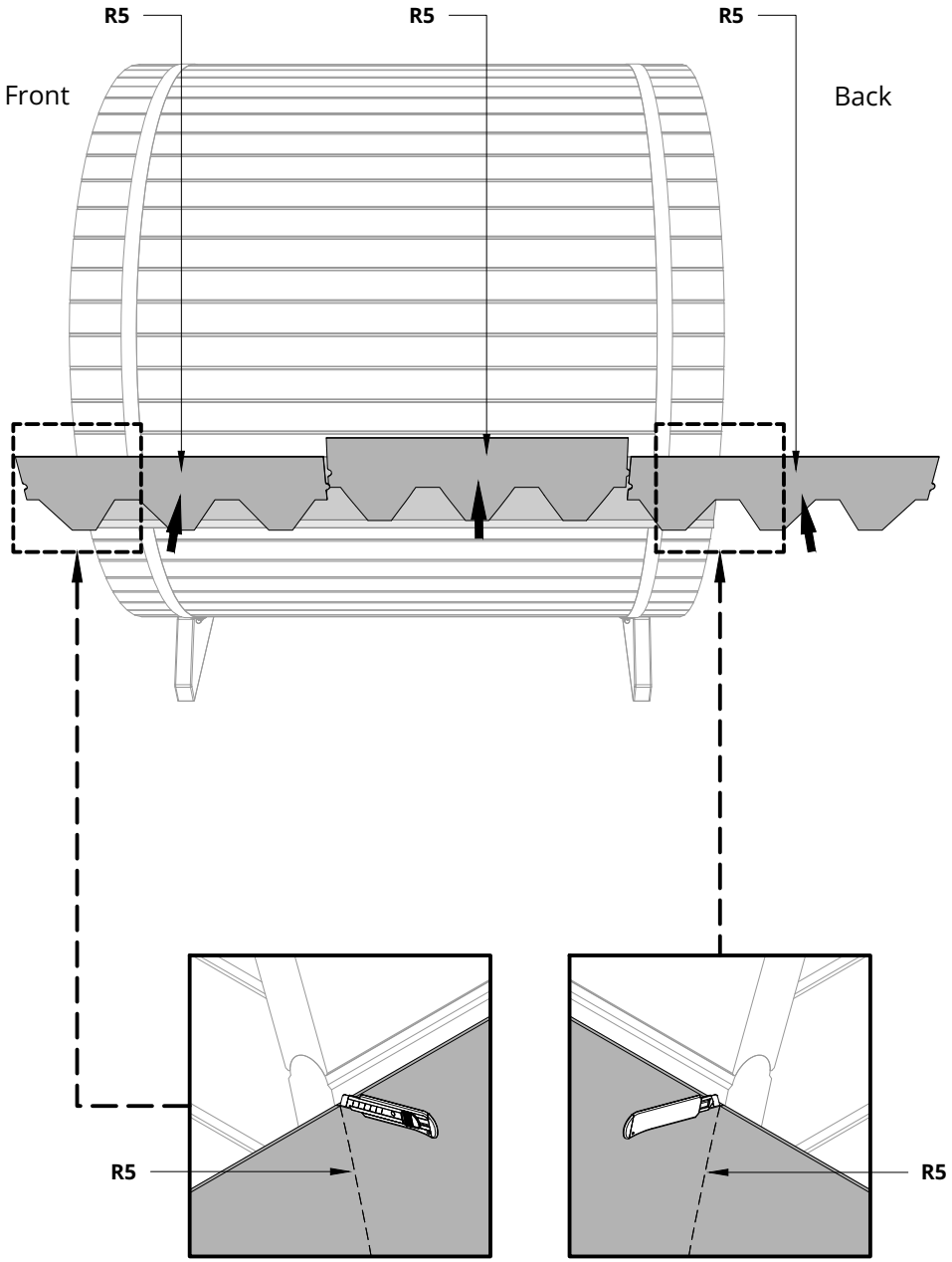

R6	Nail 2,5x25	~40

Sheets are self-adhesive, for better adhesion use a heat source!
The roof ridge can be started from the back end of the sauna or from the front end!
Cut sheets that extend over the edge!
On the last piece, use bitumen sealant, not nails!

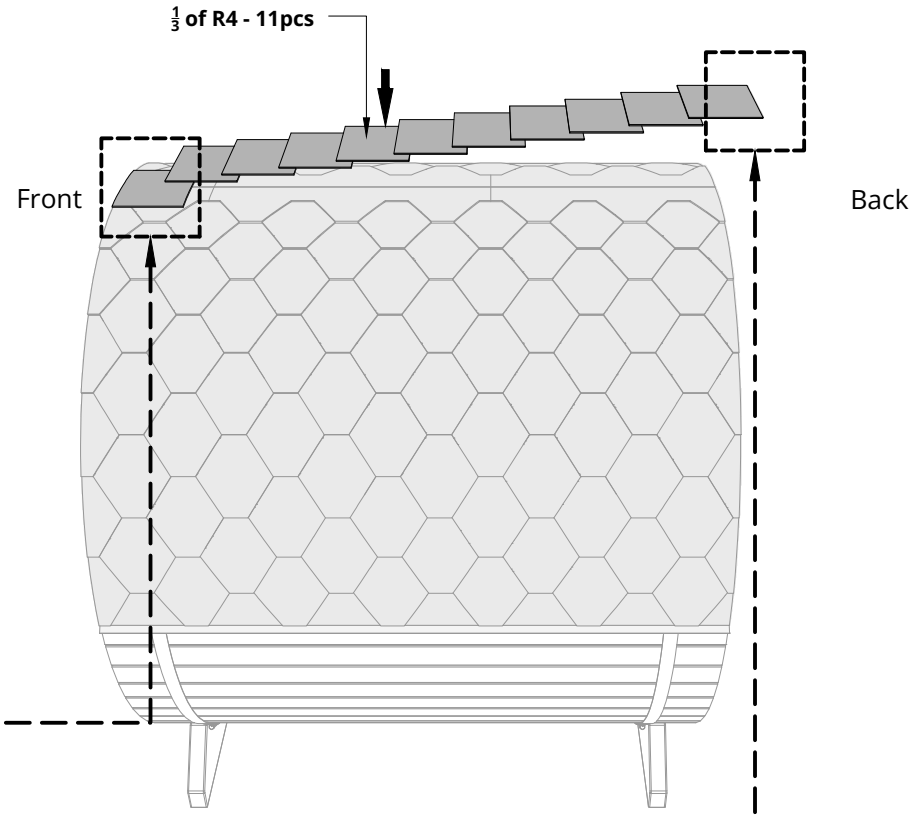

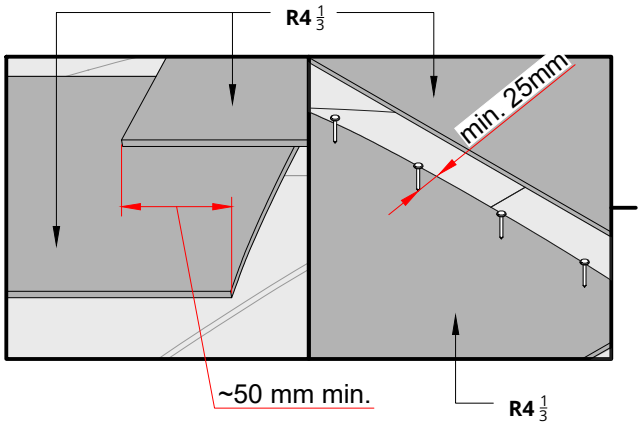

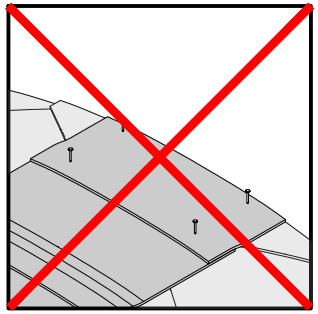

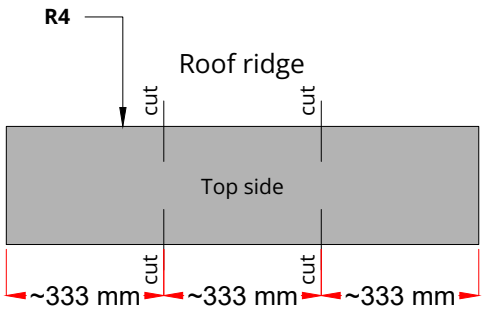

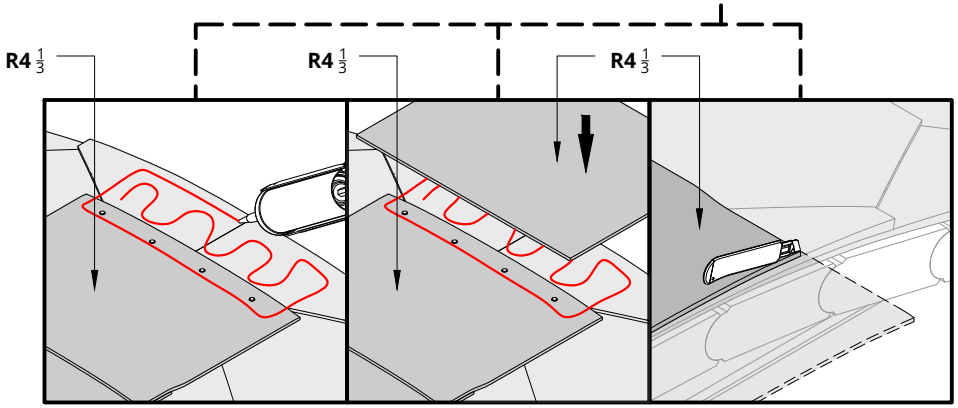

S6.1	Screws 4,5x70	20

Please countersink the screw head(s)!
Install the cover boards D1, starting from the middle at the top!
Attach 9 cover boards at the front and back of the sauna!
Fix each with 2 screws!
Fill the gaps between the bitumen sheets and covering boards in front and back with bitumen sealant!

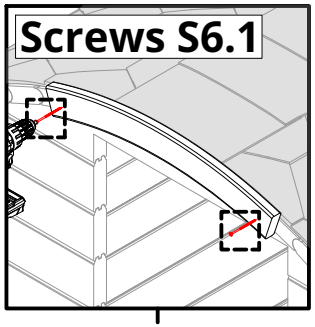

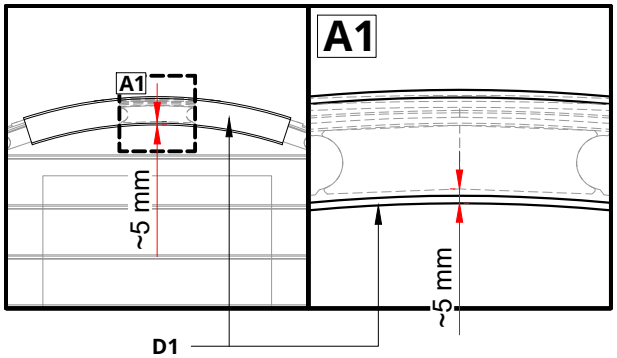

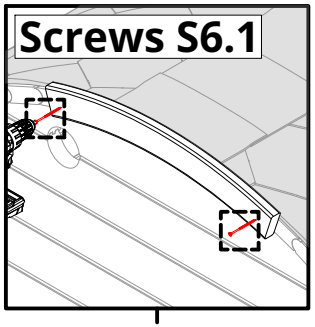

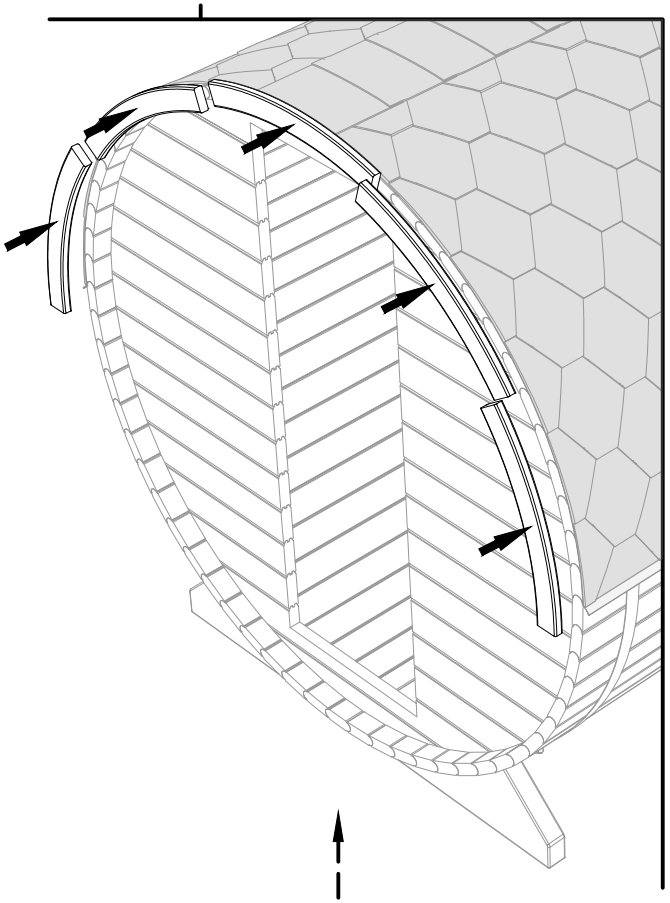

Front view of the sauna

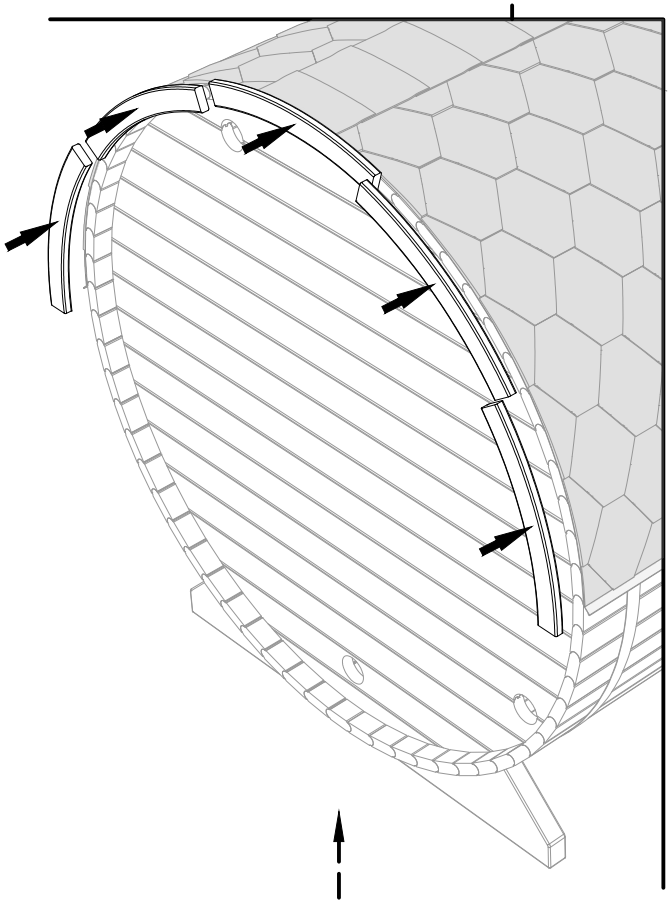

Back view of the sauna

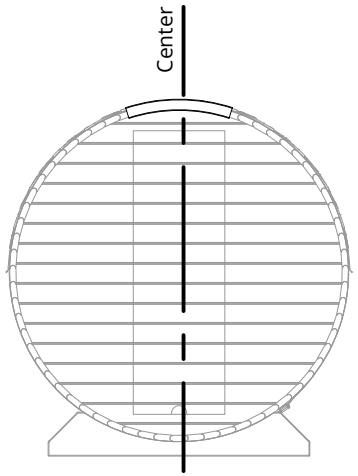

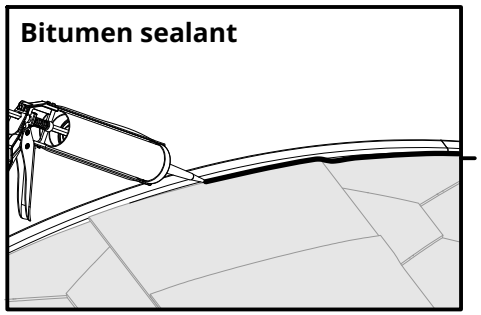

S1	Screws 3x30	18

The inner and outer ventilation grilles V2 and adjustable cover V3 are screwed with 3 screws.

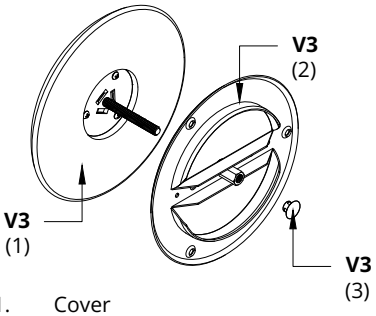

1. Cover
2. Frame
3. Plug

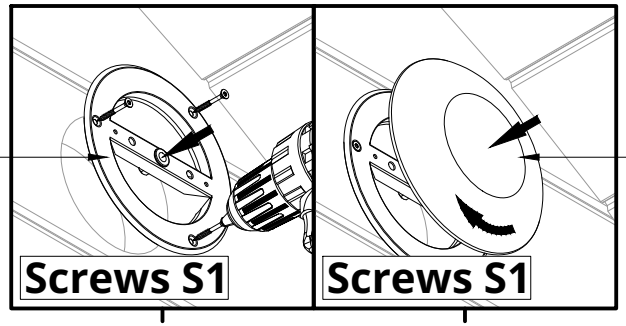

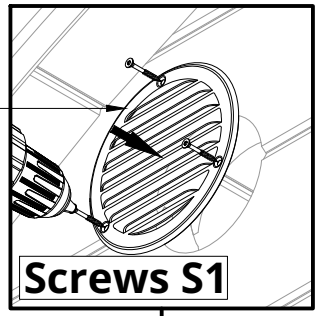

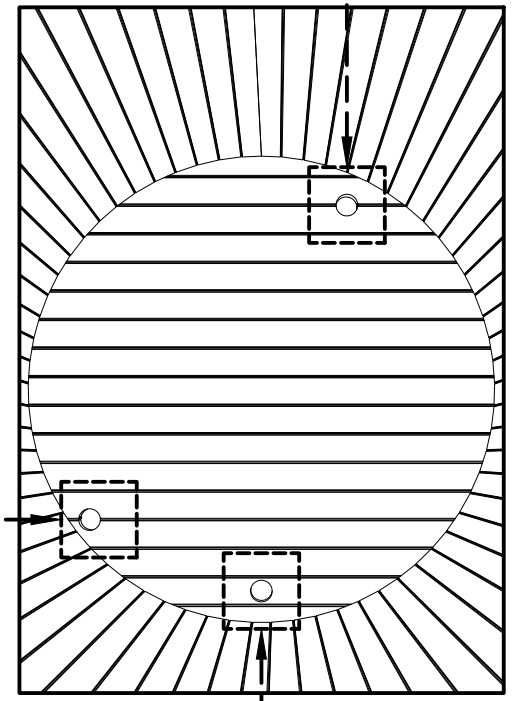

Front view *(Inside of the sauna)*

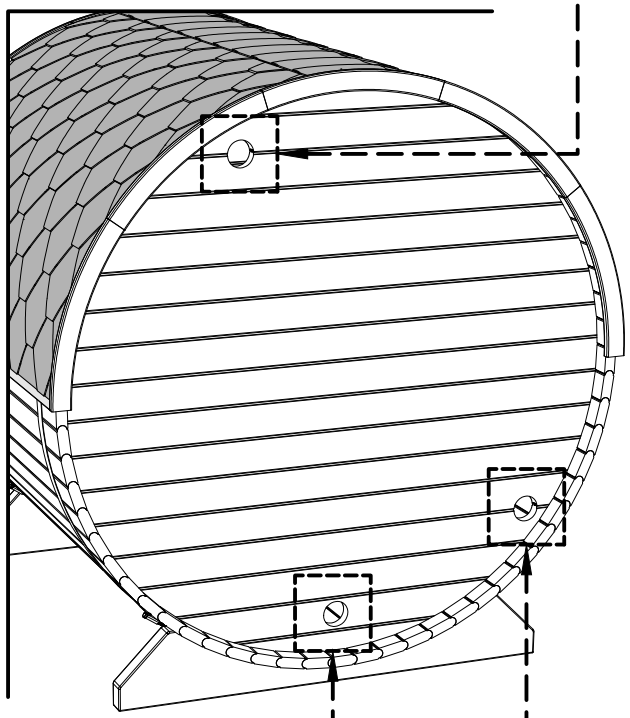

Back view of the sauna

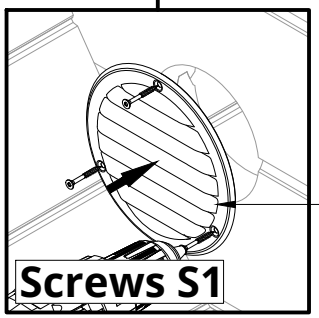

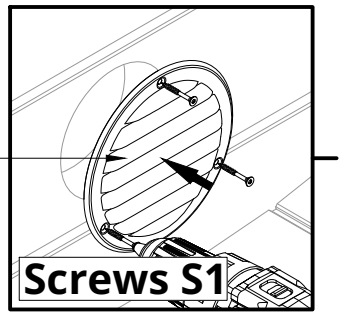

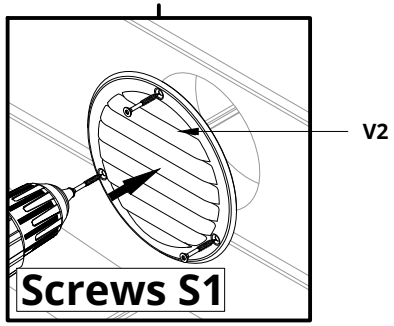

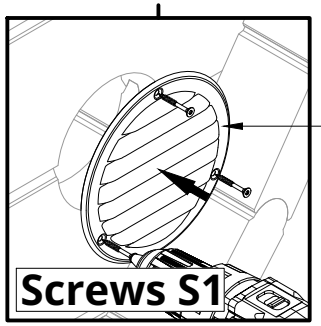

S6.2	Screws 4,2x75	16
S2	Screws 3x40	14

NB! use a level

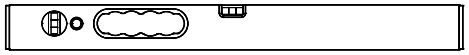

Please countersink the screw head(s)!
Insert hole cover P if they are not attached!
Remove the front wall connection strips!
Install the door from the inside!
Install windows (If ordered)(Only for woodwall)!
Install door moldings!

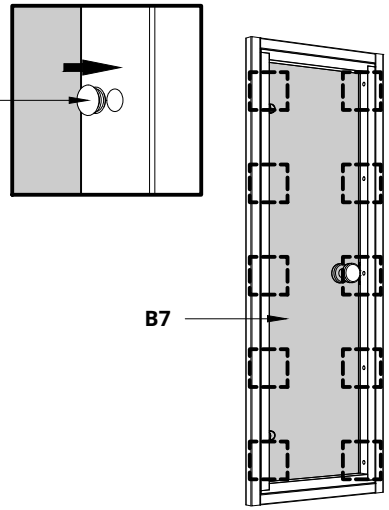

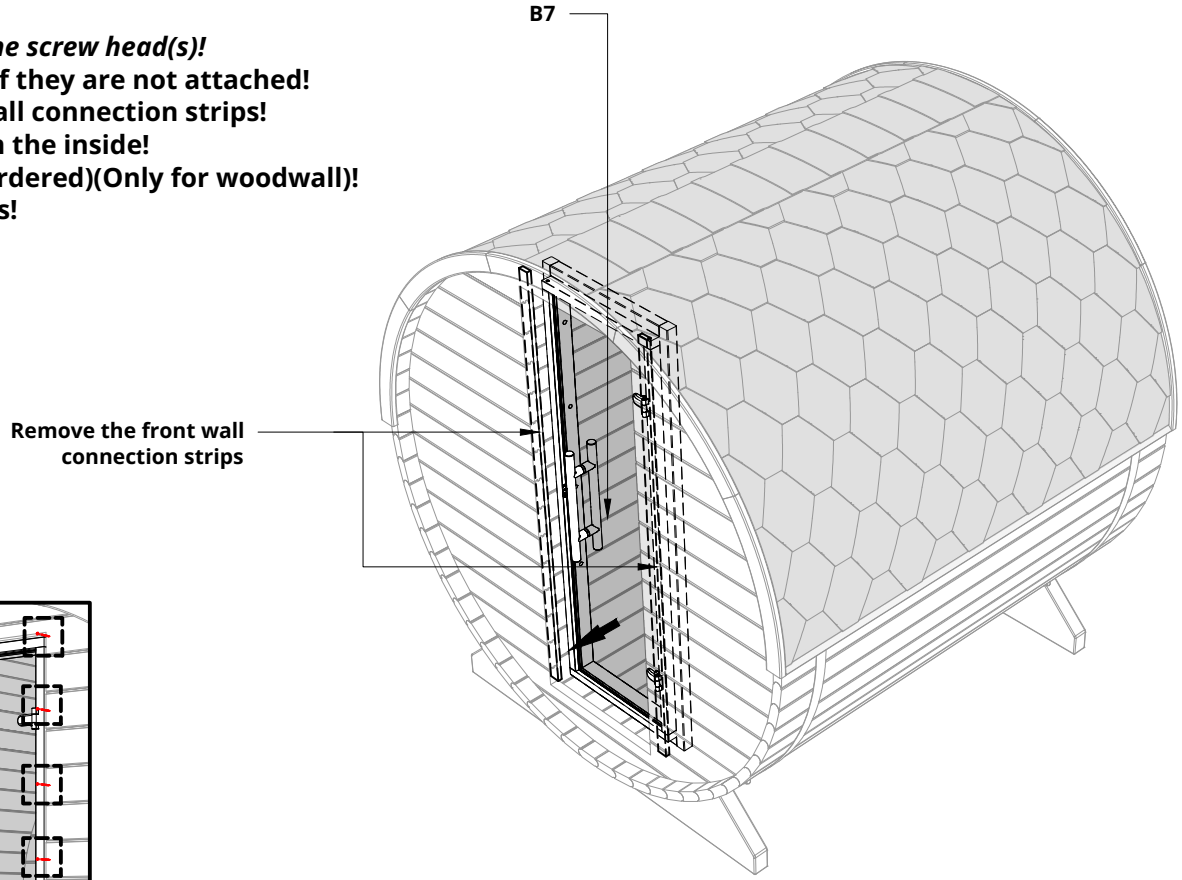

Suggestions!
Drill small hole(s) for the screws in the door moldings before screwing.

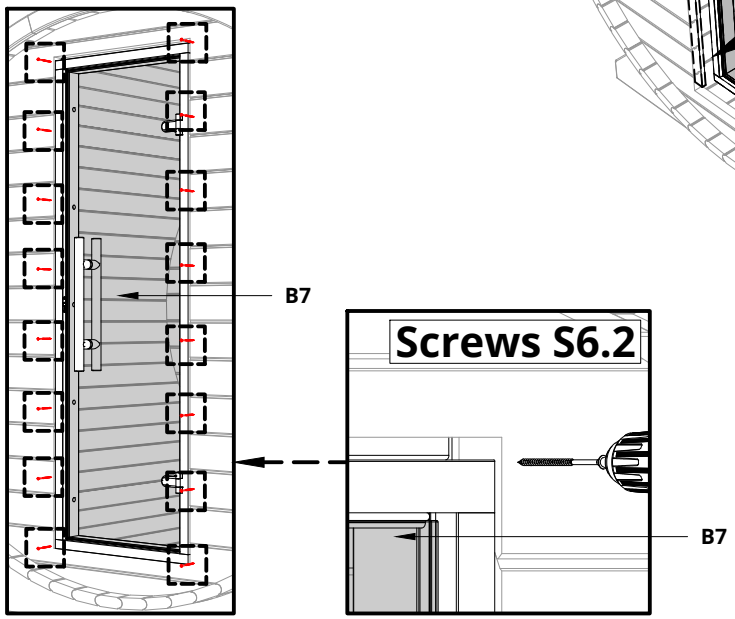

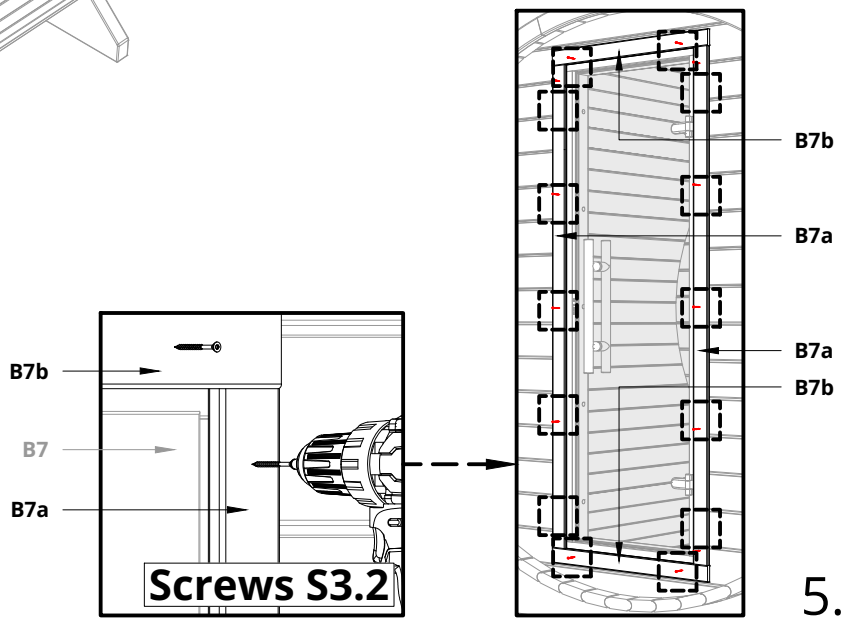

S6.2	Screws 4,2x75	14
S3.2	Screws 4,5x50	14

NB! use a level

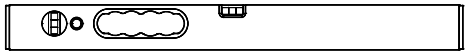

Please countersink the screw head(s)!
Insert hole cover P if they are not attached!
Door installation for the front glass wall!
Install the door from the inside,
Install door moldings!

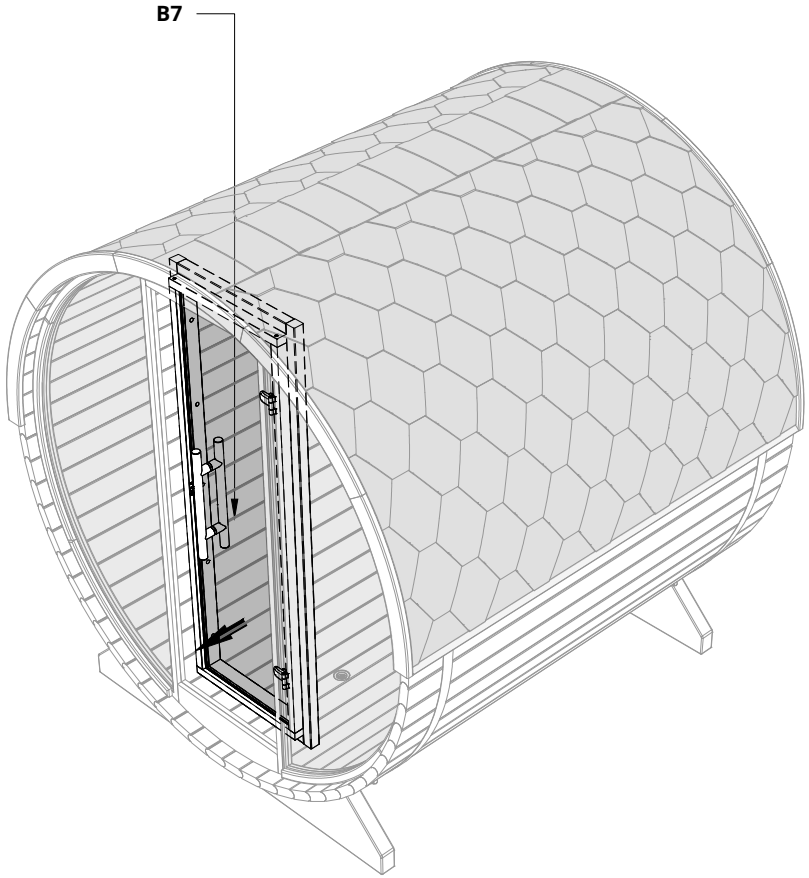

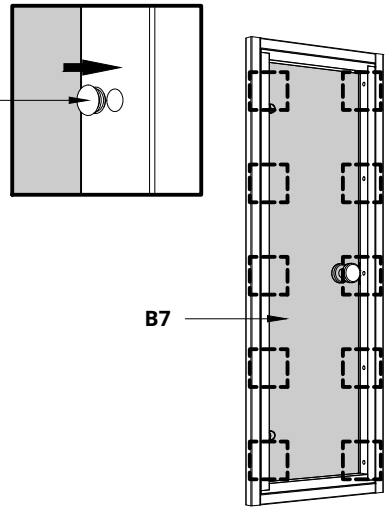

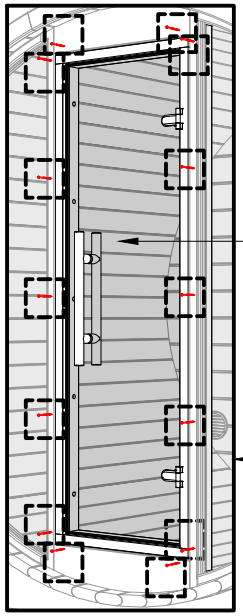

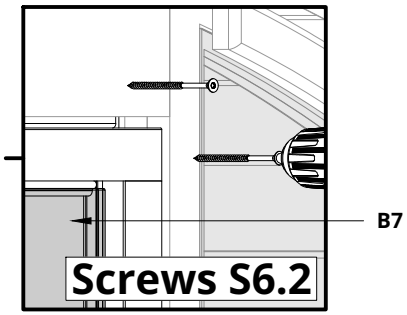

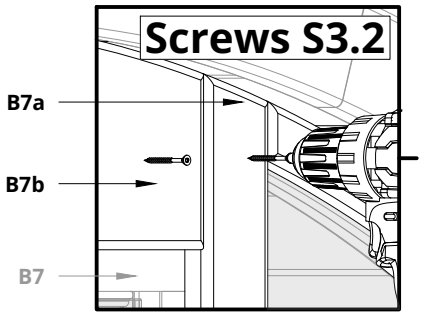

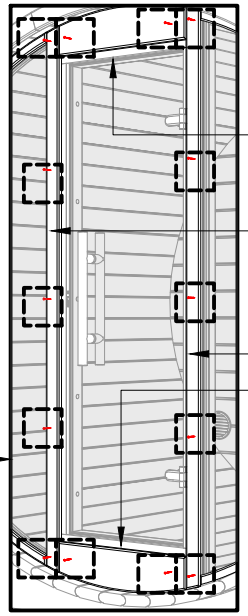

ADJUSTING ABLOY HINGES FOR GLASS DOORS

Features:

- The ABLOY FL 65 SSD Fe is a glass door hinge with lateral adjustment of +/- 3 mm.
- The hinge load capacity is approximately 40 kg when using two hinges.

Tools required for adjustment:

- Cordless drill (if hexagon wrenches are not available)
- Bit SW5 or 5mm hexagon wrench
- Bit SW3 or 3mm hexagon wrench

Adjustment guide:

- Remove the plastic cover from the hinges. Cover removal, in the direction indicated by the arrows.

- Loosen the bolt shown in the figure slightly. (DO NOT UNSCREW COMPLETELY)

- To adjust the hinges, you need to turn the screws shown in the picture with a bit SW3 or a 3mm hexagon wrench.

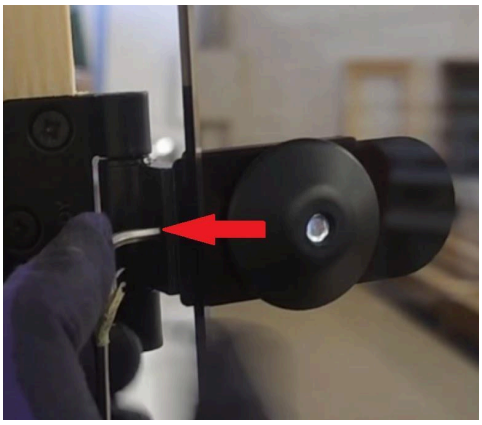

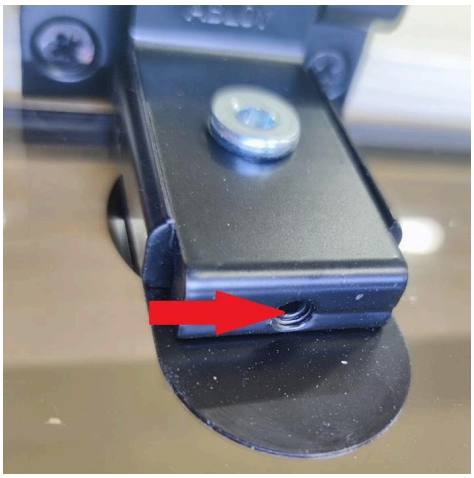

- The direction the glass moves depends on the direction the screw is turned.

  First picture - turning the screw clockwise, the glass moves closer to the hinges (assuming the screw on the other side has been loosened beforehand).

  Second picture - turning the screw counterclockwise, the glass moves away from the hinges (afterwards, tighten the screw on the other side).

- Once the hinges are adjusted to the correct position, tighten the larger bolt back.

- Put the cover back on.

General recommendations:

- When adjusting the hinge, it is important to be careful not to damage the glass or the hinge itself.

Youtube video >

ADJUSTING THE HINGES

- Remove plastic from hinges (first picture). To remove plastic, lift it from the places indicated by the red lines;
- To regulate hinges you need TORX 30 bit and cordless drill;
- Loosen the bolt shown in figure slightly. (DO NOT OPEN COMPLETELY);
- If both hinge bolts are slightly loosened, it is possible to move the glass in the directions shown in the figure;
- If the glass is set to the required distance, the bolts must be tightened again.

ADJUSTMENT OF THE ROLLER-LOCK

- PH2 screwdriver required;
- The roller lock can be adjusted by turning the screw indicated by the red line;
- Turning clockwise moves the roller inward and turning counter-clockwise moves the roller outward;
- The roller should be adjusted so that the glass moves freely behind the roller without applying force.
- The roller lock adjustable screw must be always on the upper side of the roll, otherwise the door may get stuck.

S7	Screws 4,5x80 for Spruce Screws 4,2x75 for Thermo	16

NB! use a level

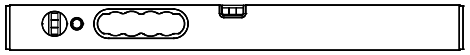

Please countersink the screw head(s)!
Measured from the center board of the floor!
Use glue between the square wood K... and the wall!
Install square woods for benches!

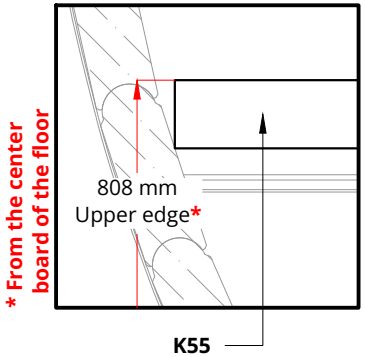

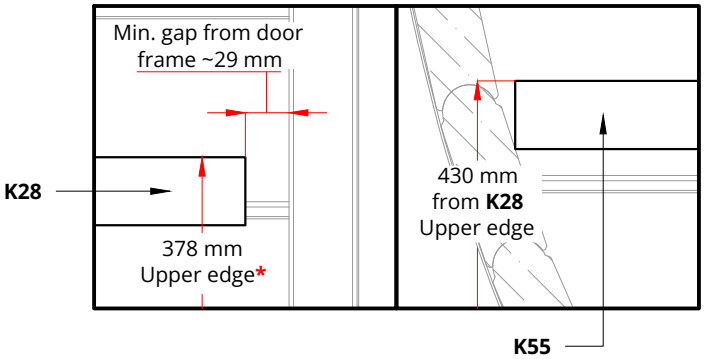

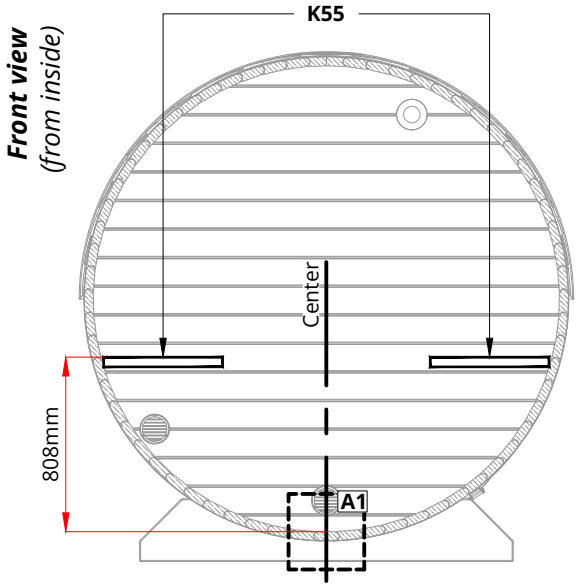

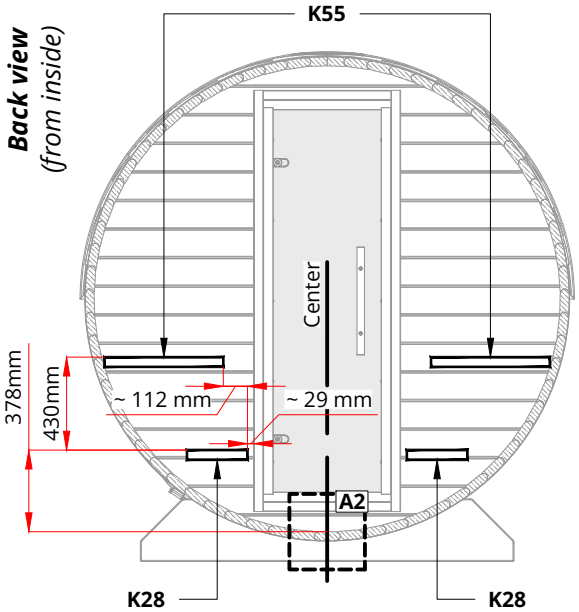

Front view
(from inside)

Back view
(from inside)

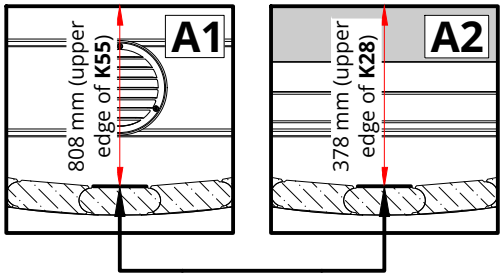

Notice!
Drill 4mm hole in the K... square woods before screwing.

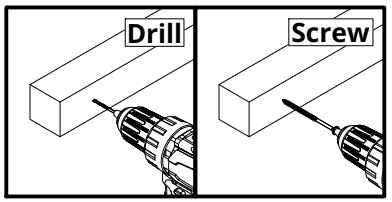

Use glue!

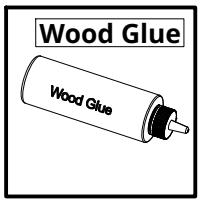

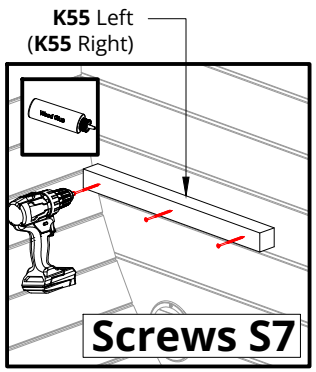

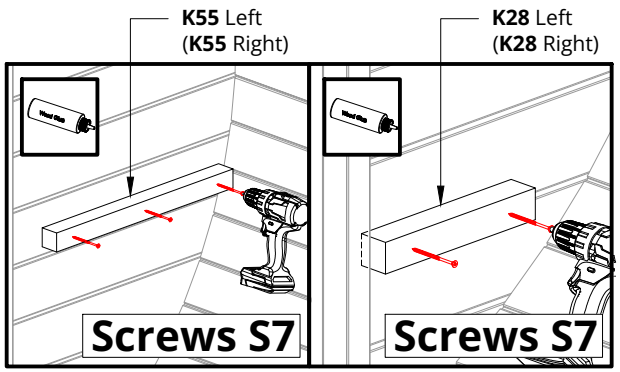

1.1

S7	Screws 4,5x80 for Spruce Screws 4,2x75 for Thermo	16

Please countersink the screw head(s)!
Use glue between the square wood K... and the wall!

Install the upper bench, but do not screw it in immediately!
Place the square wood K10 it under the bench as shown in the picture and mark the location!
Move the bench aside to install K10 where it was marked!
Put the bench back and fasten it!

Repeat these steps on the other side as well!

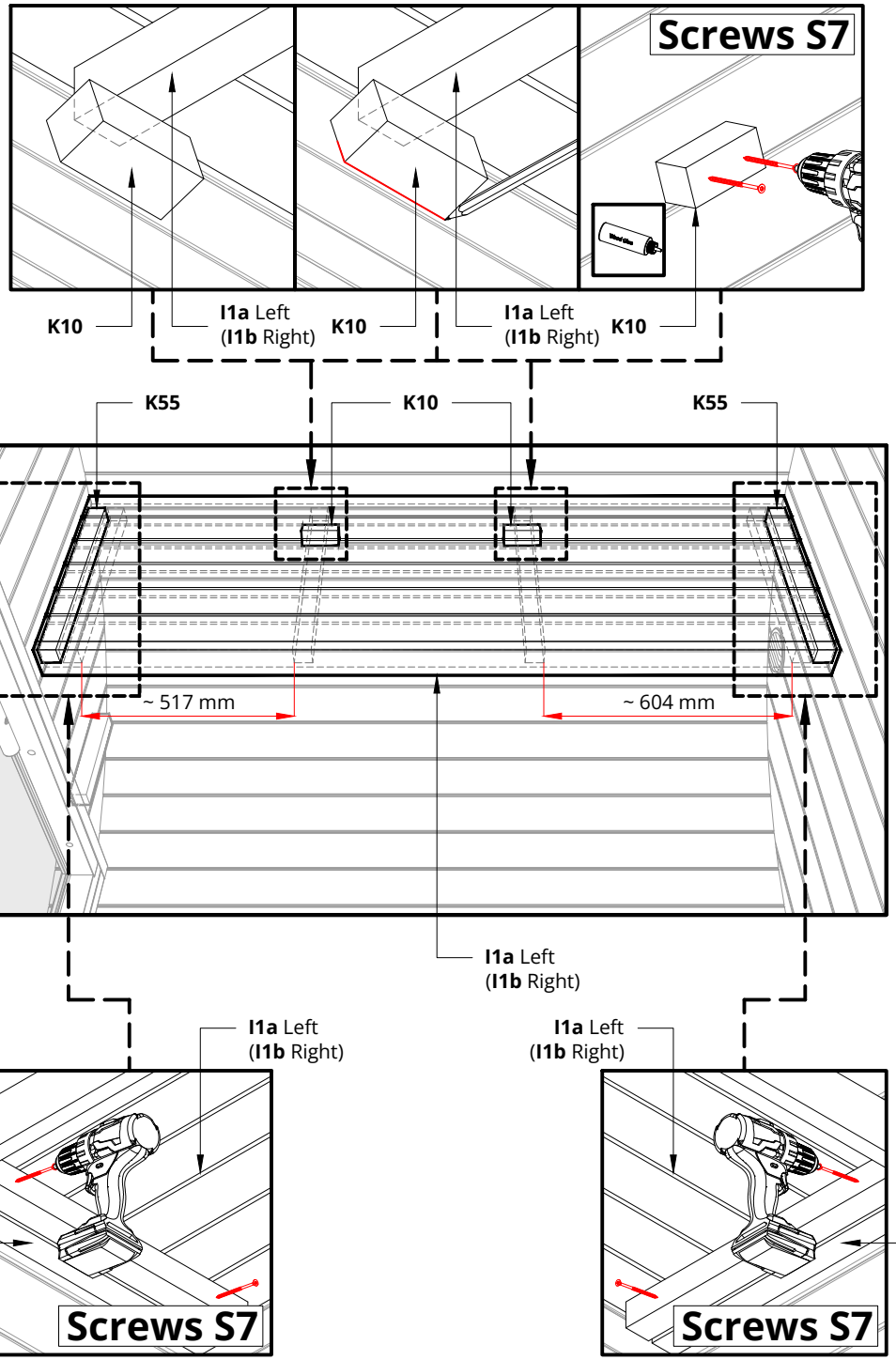

Pay attention!

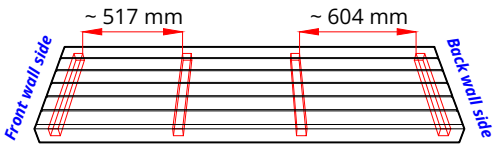

Upper bench **I1a** Left

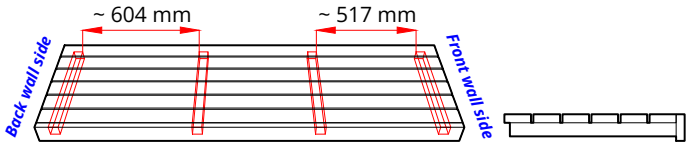

Upper bench **I1b** Right

Notice!

Drill 4mm hole in the K... square woods before screwing.

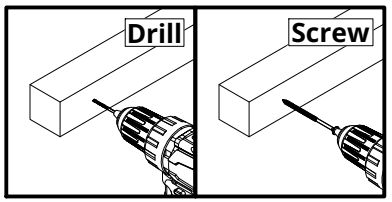

Use glue!

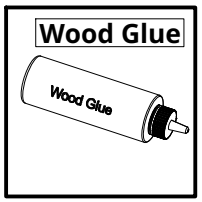

S5	Screws 4,5x60 for Spruce Screws 4,2x55 for Thermo	6
S7	Screws 4,5x80 for Spruce Screws 4,2x75 for Thermo	2

NB! use a level

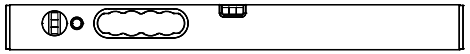

Please countersink the screw head(s)!
Use glue between the square wood(s) K...!
The square wood K20 and K60 are longer and must be cut to the correct size!

Measure the position of the upper bench leg K60!
Mark the position of the bench leg K60!
Measure the length of the bench leg K60 from the marked position downwards!
Cut bench leg to the correct size!
Install bench leg K60!
Measure the height of lower bench leg K20!
Cut bench leg to the correct size and install it!

Repeat these steps on the other side as well!

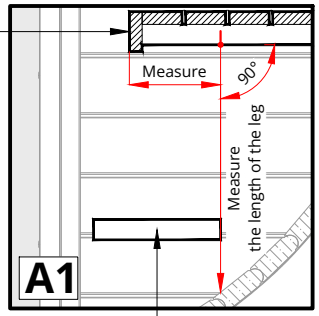

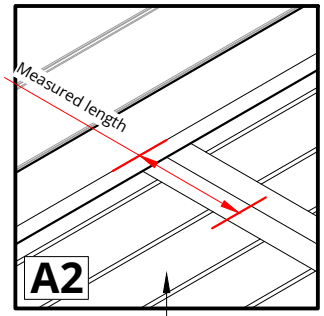

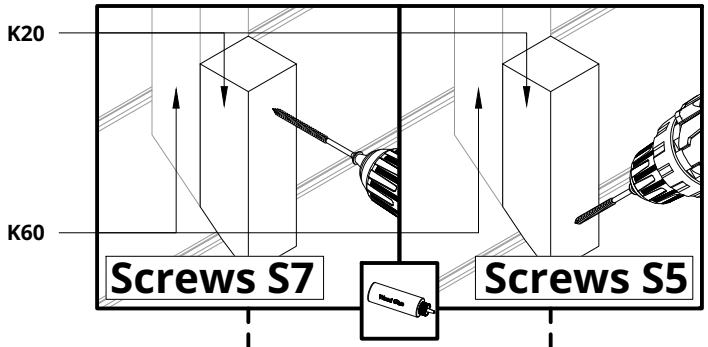

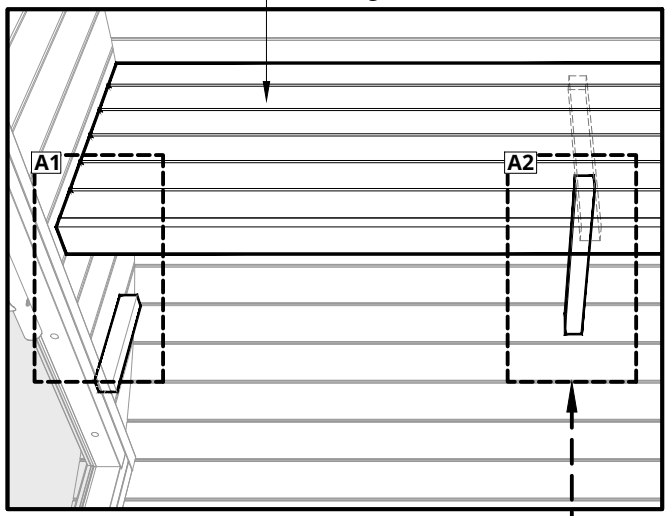

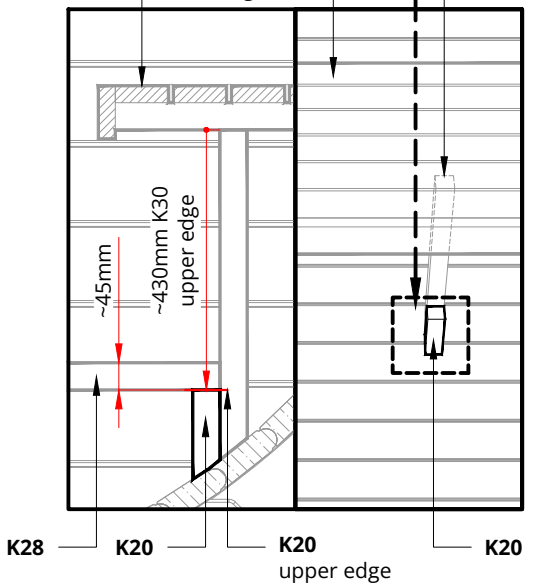

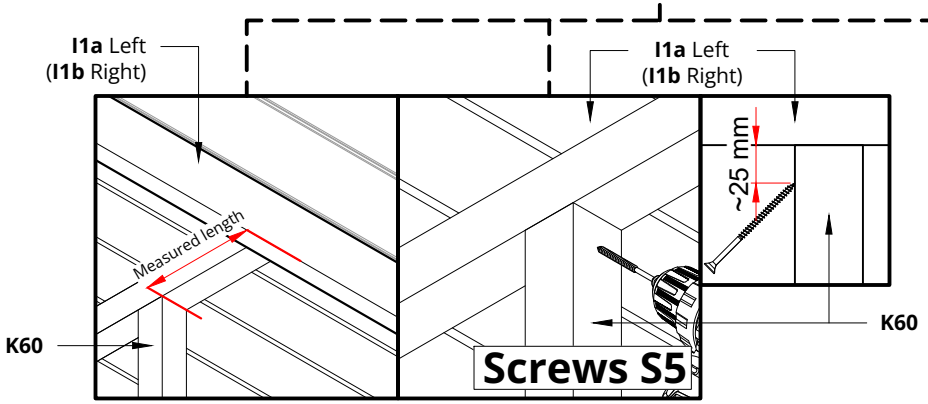

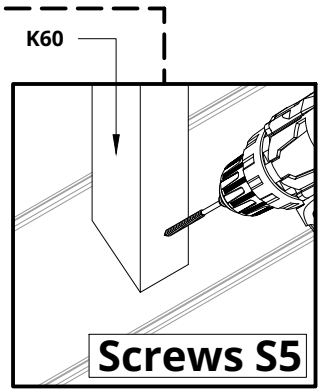

Notice!

Drill 4mm hole in the K... square woods before screwing.

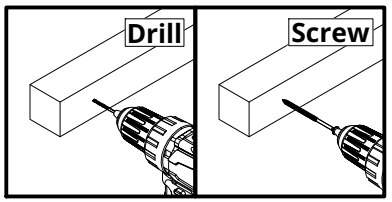

Use glue!

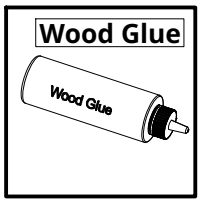

1.3

S5	Screws 4,5x60 for Spruce Screws 4,2x55 for Thermo	12
S7	Screws 4,5x80 for Spruce Screws 4,2x75 for Thermo	6

NB! use a level

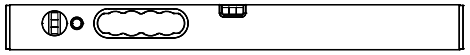

Please countersink the screw head(s)!
The square wood K20 and K28 are longer and must be cut to the correct size!
Install the Lower bench!
Install some supports to keep the bench level!
First install the outer leg(s) K28 of the bench!
Install the middle leg K20 of the bench!

Repeat these steps on the other side as well!

Pay attention!

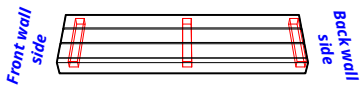

Lower bench **I2a** Left

Lower bench **I2b** Right

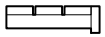

Notice!

Drill 4mm hole in the K... square woods before screwing.

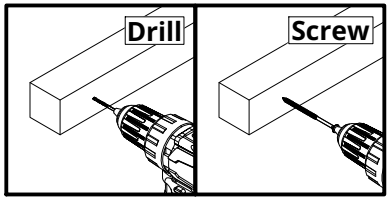

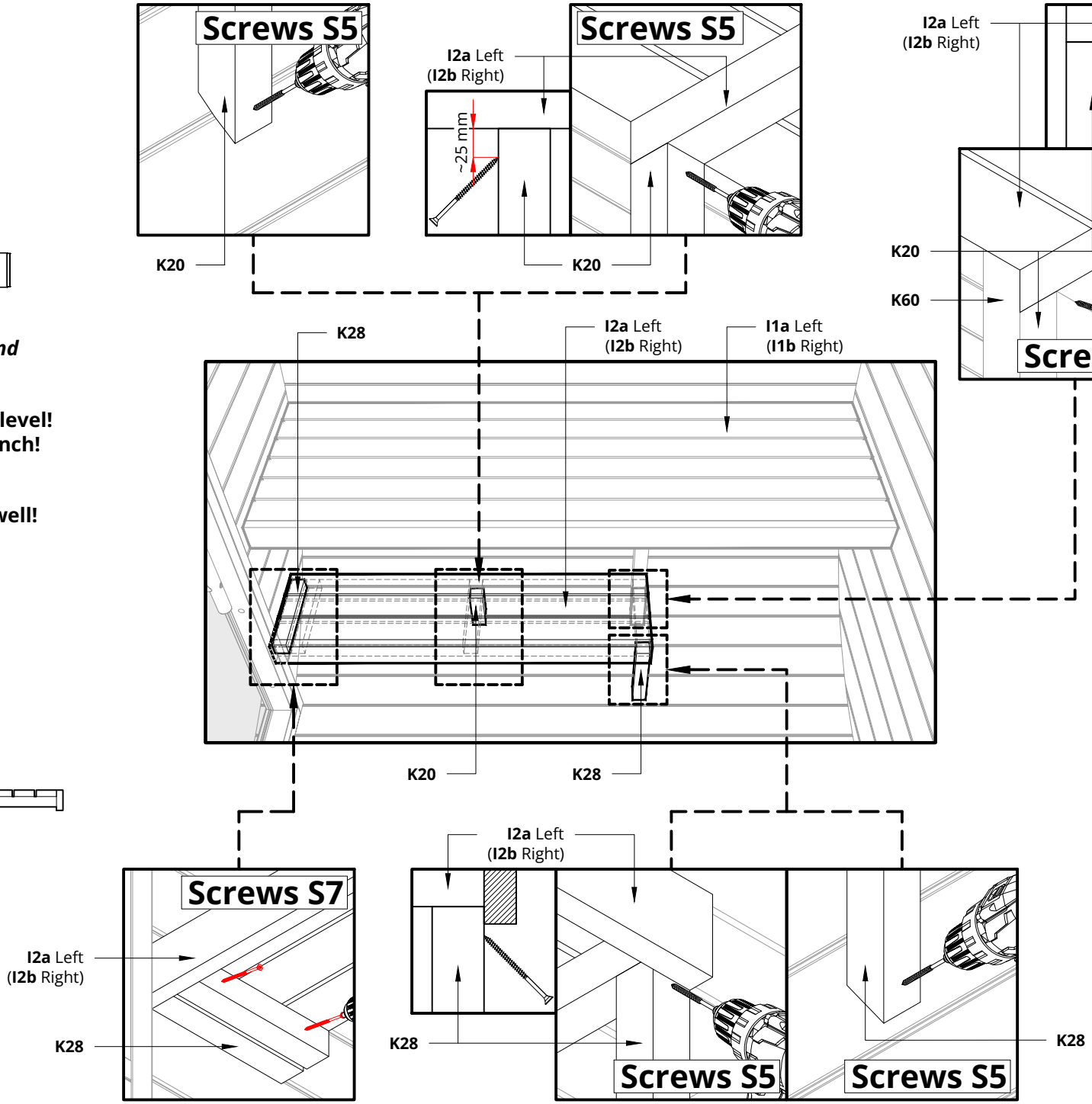

S7	Screws 4,5x80 for Spruce Screws 4,2x75 for Thermo	10

NB! use a level

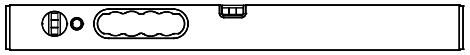

Please countersink the screw head(s)!
Use glue between the square wood K... and the wall!
Take the measurement from the top bench leg!
Install square woods for the bench skirt(s) by following the instructions in the pictures!

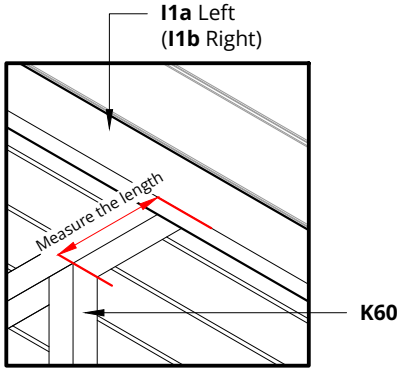

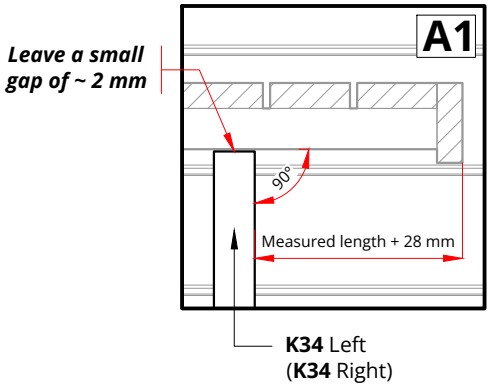

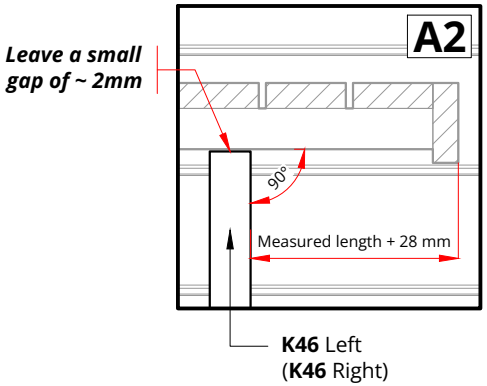

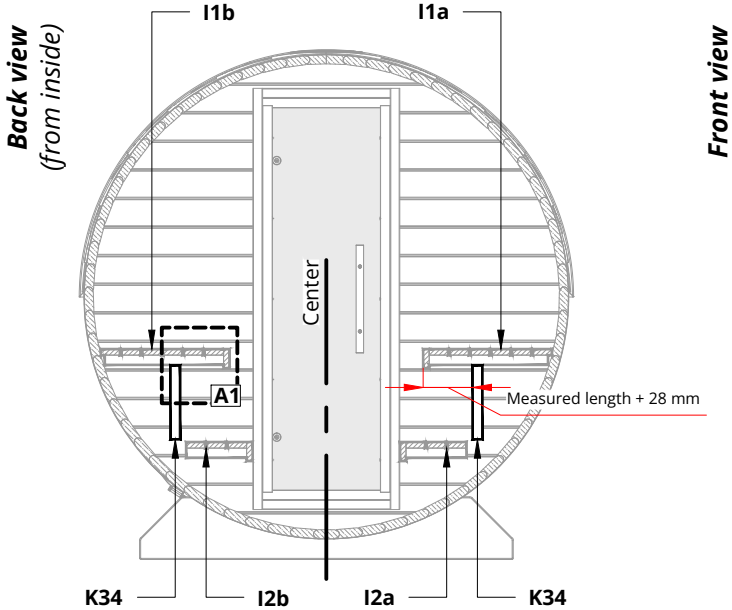

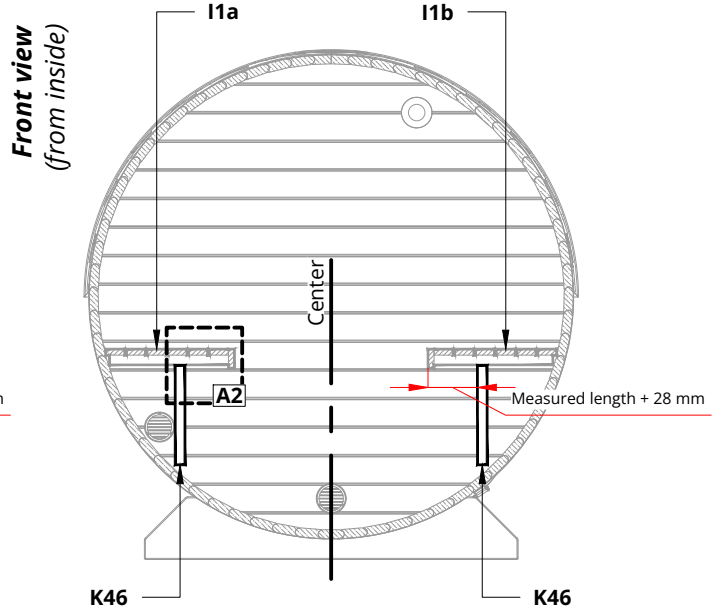

Notice!
Drill 4mm hole in the K... square woods before screwing.

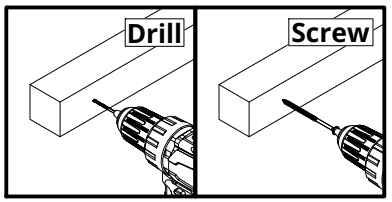

Use glue!

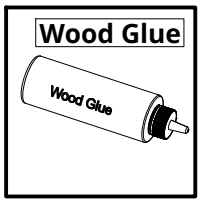

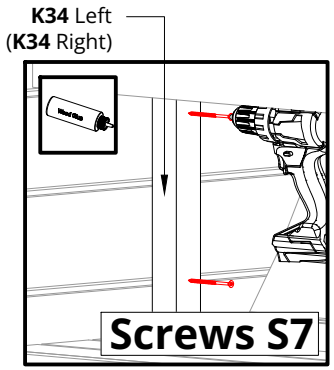

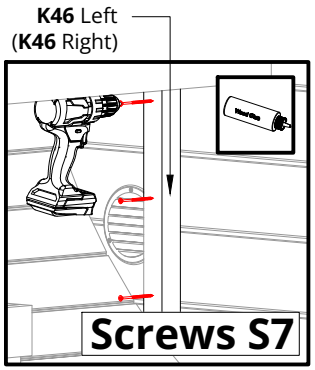

S5	Screws 4,5x60 for Spruce Screws 4,2x55 for Thermo	12

Please countersink the screw head(s)!

Install the bench skirt(s)!
Repeat these steps on the other side as well!

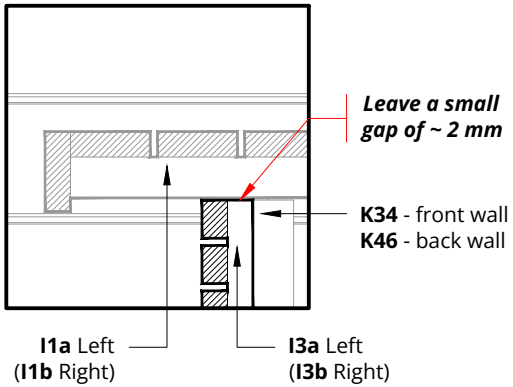

Bench skirt **I3a** Right

Bench skirt **I3b** Right

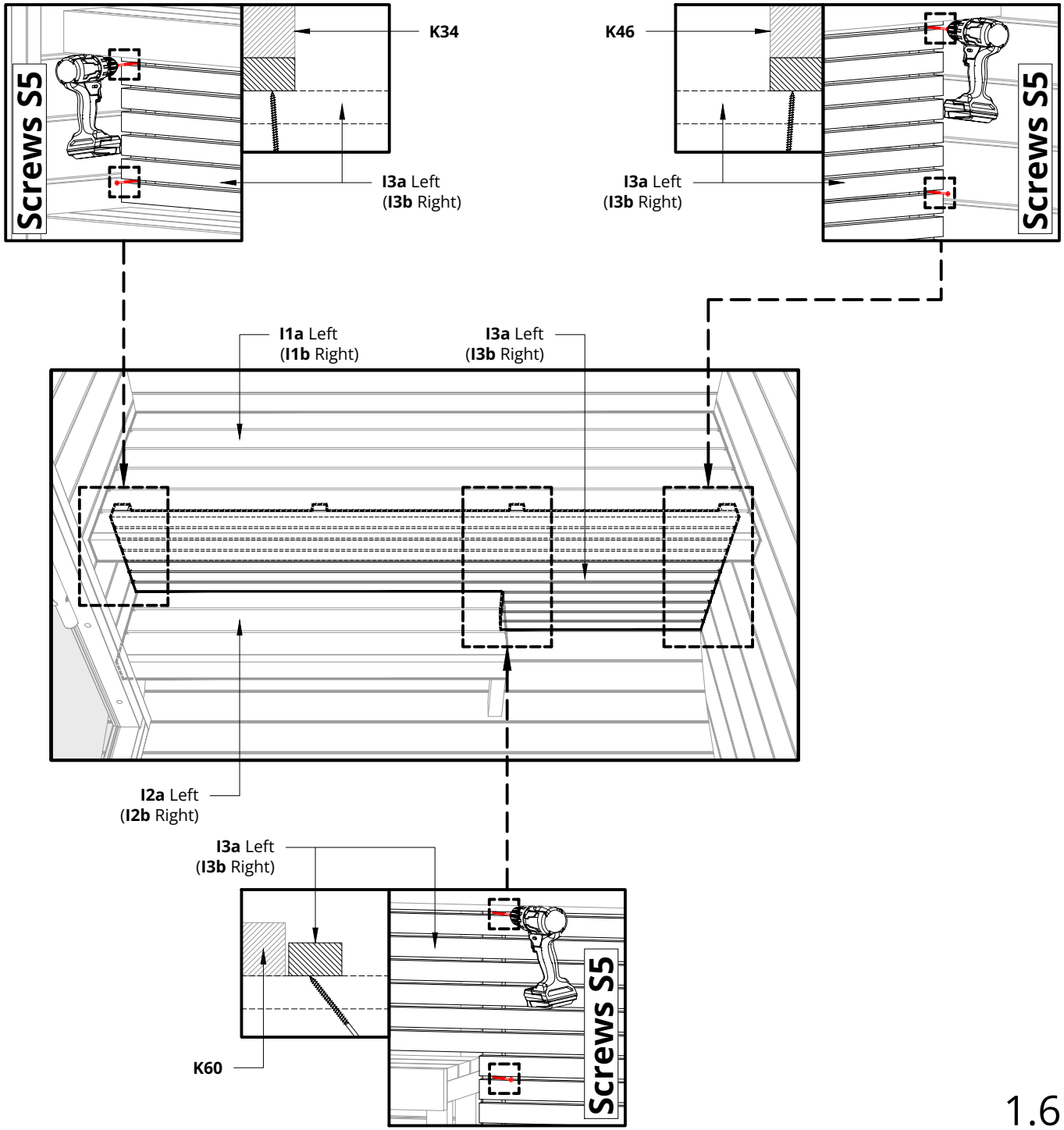

S2	Screws 3x40	18

Install the bench backrest boards 3 pieces on the left and right sides!
Cover the screw pocket holes with plugs!

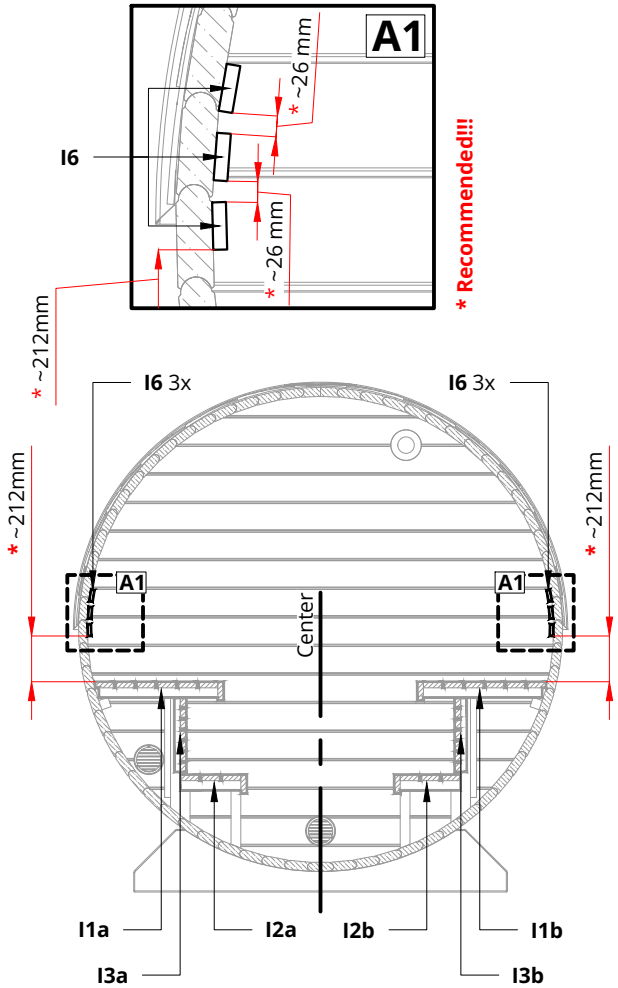

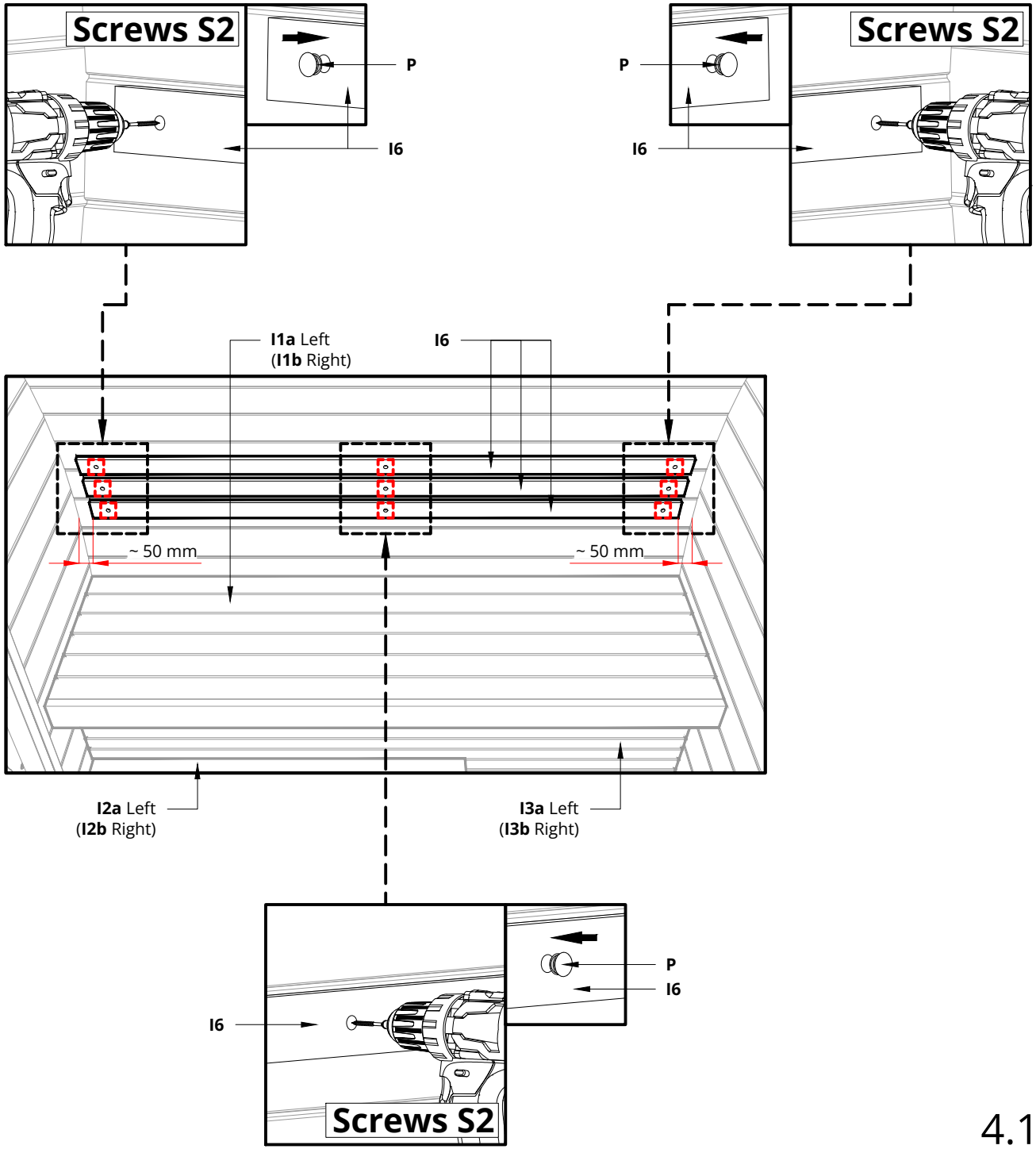

installation compatibility with all sauna wall versions!
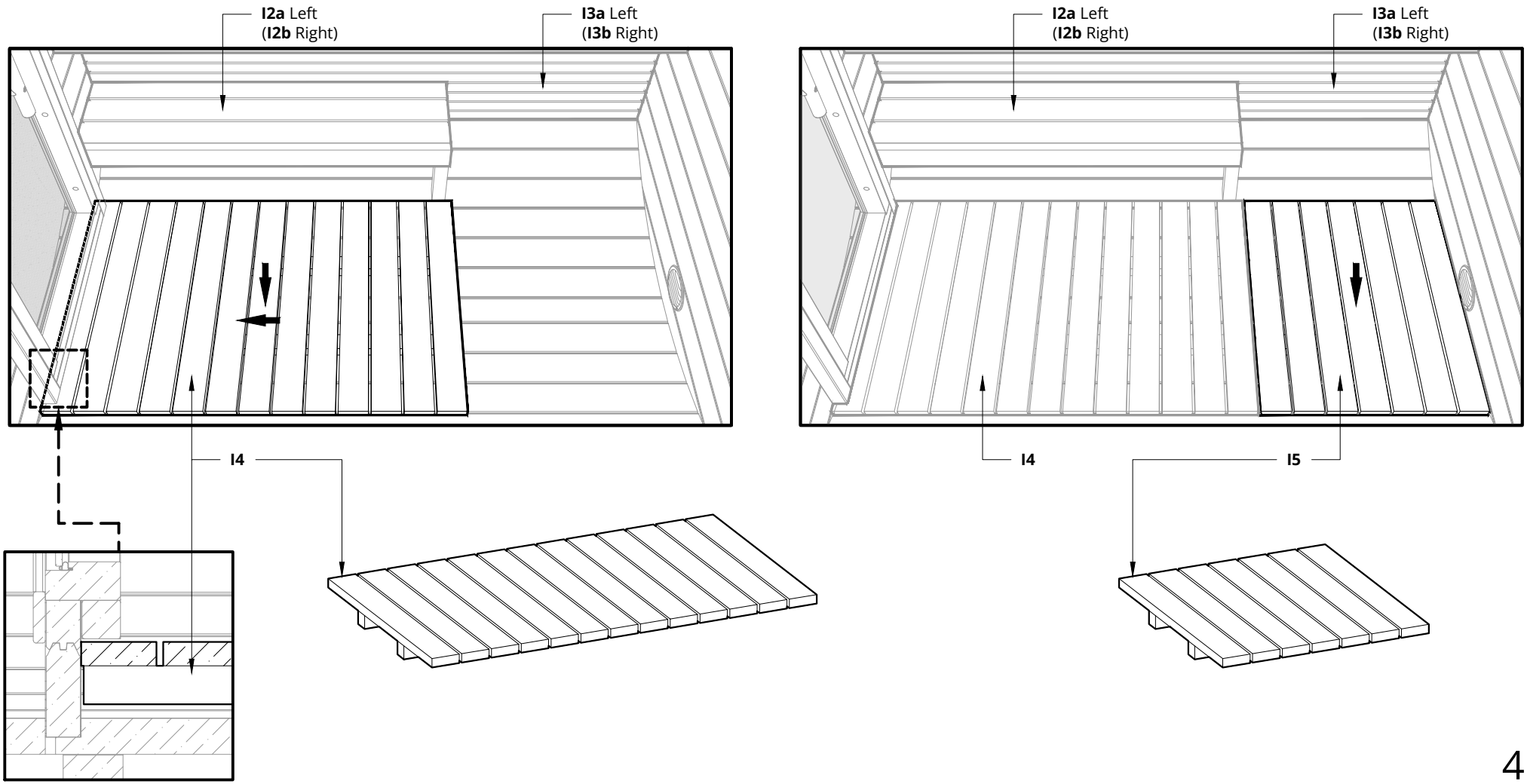
Install floor grates!
First install the longer floor grate I4!